This is a digital copy of a book that was preserved for generations on library shelves before it was carefully scanned by Google as part of a project to make the world's books discoverable online.

It has survived long enough for the copyright to expire and the book to enter the public domain. A public domain book is one that was never subject to copyright or whose legal copyright term has expired. Whether a book is in the public domain may vary country to country. Public domain books are our gateways to the past, representing a wealth of history, culture and knowledge that's often difficult to discover.

Marks, notations and other marginalia present in the original volume will appear in this file - a reminder of this book's long journey from the publisher to a library and finally to you.

Usage guidelines

Google is proud to partner with libraries to digitize public domain materials and make them widely accessible. Public domain books belong to the public and we are merely their custodians. Nevertheless, this work is expensive, so in order to keep providing this resource, we have taken steps to prevent abuse by commercial parties, including placing technical restrictions on automated querying.

We also ask that you:

+ *Make non-commercial use of the files* We designed Google Book Search for use by individuals, and we request that you use these files for personal, non-commercial purposes.

+ *Refrain from automated querying* Do not send automated queries of any sort to Google's system: If you are conducting research on machine translation, optical character recognition or other areas where access to a large amount of text is helpful, please contact us. We encourage the use of public domain materials for these purposes and may be able to help.

+ *Maintain attribution* The Google "watermark" you see on each file is essential for informing people about this project and helping them find additional materials through Google Book Search. Please do not remove it.

+ *Keep it legal* Whatever your use, remember that you are responsible for ensuring that what you are doing is legal. Do not assume that just because we believe a book is in the public domain for users in the United States, that the work is also in the public domain for users in other countries. Whether a book is still in copyright varies from country to country, and we can't offer guidance on whether any specific use of any specific book is allowed. Please do not assume that a book's appearance in Google Book Search means it can be used in any manner anywhere in the world. Copyright infringement liability can be quite severe.

About Google Book Search

Google's mission is to organize the world's information and to make it universally accessible and useful. Google Book Search helps readers discover the world's books while helping authors and publishers reach new audiences. You can search through the full text of this book on the web at `http://books.google.com/`

B 462782 DUPL

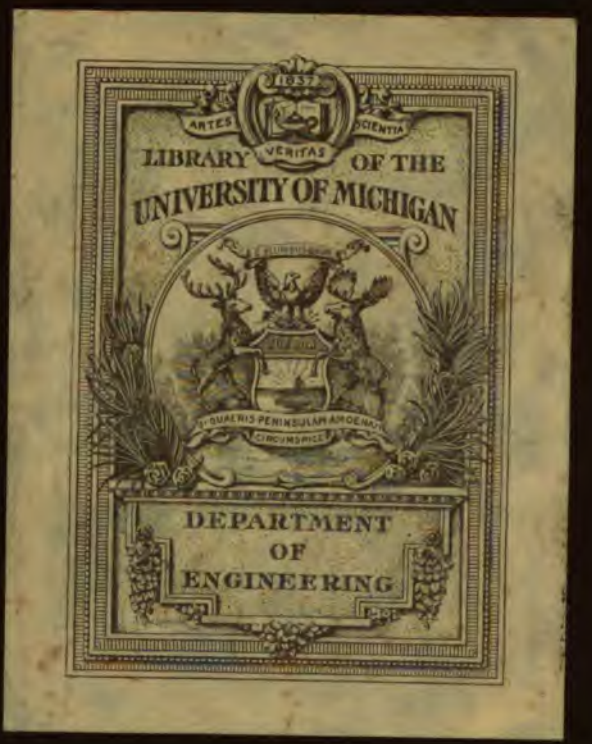
1837
ARTES
SCIENTIA
VERITAS
LIBRARY OF THE
UNIVERSITY OF MICHIGAN
SI QUAERIS PENINSULAM AMOENAM
CIRCUMSPICE
DEPARTMENT
OF
ENGINEERING

ENGINEERING
LIBRARY

RA
435
.R52
1911

WORKS OF ELLEN H. RICHARDS

PUBLISHED BY

JOHN WILEY & SONS

43–45 East Nineteenth Street, New York

Conservation by Sanitation.
Air and Water Supply; Disposal of Waste. [Including a Laboratory Guide for Sanitary Engineers.] 8vo, xii + 305 pages. Illustrated. Cloth, $2.50.

Laboratory Notes on Industrial Water Analysis: A Survey Course for Engineers.
8vo, 52 pages. Cloth, 50c net.

The Cost of Cleanness.
12mo, v + 109 pages. Cloth. $1.00.

The Cost of Living as Modified by Sanitary Science.
Third Edition, Revised. 12mo. 164 pages. Cloth. $1.00.

Air, Water, and Food; From a Sanitary Standpoint.
By Ellen H. Richards and Alpheus G. Woodman, Assistant Professor of Food Analysis, Massachusetts Institute of Technology. Third Edition, Revised and Enlarged. 8vo. 278 pages. Cloth. $2.00.

The Cost of Food: A Study in Dietaries.
12mo. 161 pages. Cloth. $1.00.

The Dietary Computer.
By Ellen H. Richards, Instructor in Sanitary Chemistry, Massachusetts Institute of Technology, assisted by Louise Harding Williams. $1.50 net. Pamphlet separately, $1.00 net.

The Cost of Shelter.
12mo. vi + 136 pages. Illustrated. Cloth. $1.00.

"Cost of Living" Series.
1. Cost of Living. 2. Cost of Food. 3. Cost of Shelter. 4. Cost of Cleanness. 12mo. Cloth. 4 vols. in a box. $4.00.

Published by WHITCOMB & BARROWS

Huntington Chambers

The Chemistry of Cooking and Cleaning.
By Ellen H. Richards and S. Maria Elliott. 158 pages. Cloth. $1.00.

Food Materials and their Adulterations.
183 pages. Cloth. $1.00.

Home Sanitation.
Revised Edition. Edited by Ellen H. Richards and Marion Talbot. 85 pages. Paper. 25c.

Plain Words about Food.
The Rumford Leaflets. Illustrated. 176 pages. Cloth. $1.00.

First Lessons on Food Diet.
52 pages. Cloth. 30c net.

The Art of Right-Living.
50 pages. Cloth. 50c net.

Sanitation in Daily Life.
82 pages. Cloth. 65c. net.

AIR, WATER, AND FOOD

FROM A SANITARY STANDPOINT.

BY

ELLEN H. RICHARDS AND ALPHEUS G. WOODMAN.

Instructor in Sanitary Chemistry.
Massachusetts Institute of Technology.

Assistant Professor of Food Analysis,
Massachusetts Institute of Technology.

"These cannot be taken as sufficient . . . in these times when every word spoken finds at once a ready doubter, if not an opponent. They are, however, specimens, and will serve to make comparisons in time to come."—ANGUS SMITH

"The ideal scientific mind, therefore, must always be held in a state of balance which the slightest new evidence may change in one direction or another. It is in a constant state of skepticism, knowing full well that nothing is certain."—HENRY A. ROWLAND.

THIRD EDITION, REVISED AND ENLARGED.

FIRST THOUSAND.

NEW YORK:
JOHN WILEY & SONS.
LONDON: CHAPMAN & HALL, LIMITED.
1911

Copyright, 1900, 1904, 1909,
BY
ELLEN H. RICHARDS AND ALPHEUS G. WOODMAN.

THE SCIENTIFIC PRESS
ROBERT DRUMMOND AND COMPANY
BROOKLYN, N. Y.

PREFACE TO THE THIRD EDITION.

THE great increase of attention to the relations of physical environment to mental and moral welfare leads the authors to hope that this revised and enlarged edition will meet with approval by the body of seekers after truth along these lines of study and investigation.

More clearly than any one else they recognize the omissions and shortcomings of any book dealing with so comprehensive a subject under the limitations of a short school course. Therefore a suggestive rather than a complete treatment has been adopted, and a certain conservatism has governed the discussion of some subjects which to treat fully would require too much space as well as a previous training impossible to assume.

The chapters on analytical methods have been considerably enlarged; the character of the matter added tends to make the work more adapted to the needs of the chemical and sanitary engineer as well as to the general student and householder. In a subject so rapidly advancing the printed page can hardly hope to keep fully abreast of the times, but all the methods have been reviewed or modified, and tentative ones have been retained or dropped as experience has indicated their value.

The bibliography has been revised and brought up to date.

2[illegible]303

CONTENTS.

CHAPTER		PAGE
I.	THREE ESSENTIALS OF HUMAN EXISTENCE	1
II.	AIR: COMPOSITION, IMPURITIES, RELATION TO HUMAN LIFE	10
III.	THE PROBLEM OF VENTILATION	19
IV.	METHODS OF EXAMINATION	27
V.	WATER: SOURCE, PROPERTIES, SOLVENT POWER, AS A CARRIER	57
VI.	THE PROBLEM OF SAFE WATER AND INTERPRETATION OF ANALYSES	76
VII.	METHODS OF EXAMINATION	96
VIII.	FOOD IN RELATION TO HUMAN LIFE, DEFINITION, SOURCES, CLASSES, DIETARIES	142
IX.	ADULTERATION AND SOPHISTICATION OF FOOD MATERIALS	157
X.	METHODS OF FOOD ANALYSIS	167
APPENDICES, TABLES, REAGENTS		235
BIBLIOGRAPHY		263

AIR, WATER, AND FOOD.

CHAPTER I.

THREE ESSENTIALS OF HUMAN EXISTENCE.

AIR, water, and food are three essentials for healthful human life. Sanitary Chemistry deals with these three commodities in their relation to the needs of daily existence: first, as to their normal composition; second, as to natural variations from the normal; third, as to artificial variations—those produced directly by human agency with benevolent intention, or resulting from carelessness or cupidity. A large portion of the problems of public health come under these heads, and a discussion of them in the broadest sense includes a consideration of engineering questions and of municipal finances. This, however, is beyond the scope of the present work.

The following pages will deal chiefly with such portions of the subject of Sanitary Chemistry as come directly under individual control, or which require the education of individuals in order to make up the mass of public opinion which shall support the city or state in carrying out sanitary measures.

A notable interest in the subject of individual health as

a means of securing the highest individual capacity both for work and for pleasure is being aroused as the application of the principles governing the evolutionary progress of other forms of living matter is seen to extend to mankind.

Will power may guide human forces in most economical ways, and may concentrate energy upon a focal point so as to seem to accomplish superhuman feats, but it cannot create force out of nothing. There is a law of conservation of human energy. The human body, in order to carry on all its functions to the best advantage, especially those of the highest thought for the longest time, must be placed under the best conditions and must be supplied with *clean air*, *safe water*, and *good food*, and must be able to appropriate them to its use. The day is not far distant when a city will be held as responsible for the purity of the air in its schoolhouses, the cleanliness of the water in its reservoirs, and the reliability of the food sold in its markets as it now is for the condition of its streets and bridges. Nor will the years be many before educational institutions will be held as responsible for the condition of the bodies as of the minds of the pupils committed to their care; when a chair of Sanitary Science will be considered as important as a chair of Greek or Mathematics; when the competency of the food-purveyor will have as much weight with intelligent patrons as the scholarly reputation of any member of the Faculty. Within a still shorter time will catalogues call the attention of the interested public to the ventilation of college halls and dormitories, as well as to the exterior appearance and location.

These results can be brought about only when the students themselves appreciate the possibilities of increased mental production under conditions of decreased friction, such as can be found only when the requirements of health are perfectly fulfilled.

Of the three essentials, air may well be considered first, although its office is to convert food already taken into heat and energy. Its exclusion only for a few minutes causes death, and in quantity used it far exceeds the other two. Again, so important is the action of air that the quality of food is of far less consequence when abundant oxygen is present, as in pure air, than when it is present in lessened quantity, as in air vitiated by foreign substances.

Individual habit has much to do with the appreciation of good air, and as our knowledge of the value of an abundance of this substance in securing great efficiency in the human being increases, we shall be led to attach more importance to the sufficiency of the supply.

In northern climates air is not free to all in the sense of costing nothing, for the coming of fresh air into the house means an accompaniment of cold which must be counteracted by the consumption of fuel. A mistaken idea of economy leads householders, school boards, and college trustees to limit the size of the air-ducts as well as of the rooms. It is therefore necessary to emphasize the facts which science has fully established, in order to secure the survival of the fittest of the race under the present pressure of economic conditions, which take so little account of the highest welfare of the human machine.

Air, water, and soil are the common possessions of mankind. It is impossible for man to use either selfishly without injury to his neighbor and without squandering his inheritance. Primitive man could leave a given spot when the soil became offensive, and neighbors were then too few to require consideration; but neither man nor beast could with impunity foul the stream for his neighbor who had rights below him. The soil is permanent; one knows where to look for it and its pollution. Air is abundant and is kept in con-

stant motion by forces of nature beyond human control, so that, save in the neighborhood of an exceptionally offensive factory, man does not often foul the free air of heaven; it is only when he confines it within unwonted bounds that it becomes a menace.

Water is the next precious commodity of the three. Without it man dies in a few days; without it the soil is barren; without it air in motion parches all vegetation and carries clouds of dust-particles; without it there is no life. As population increases it becomes necessary to collect as much of the rainfall as possible, to store it until needed, and to use it with discretion. After use it is often loaded with impurities and sent to deal death and destruction to those who require it later, and yet, in nature's plan, it is the carrier of the world, and rightly treated and carefully husbanded there is enough for the needs of all. Its presence or absence has been the controlling force in determining the habitations of men. In its office of carrier it not only brings nourishment in solution to the tissues of the human body, but also carries away the refuse material. It is a cardinal principle in all sanitary reforms to get rid of that which is useless as soon as possible. Too little water allows accumulation of waste material and a clogging of the bodily drainage system.

The average quantity needed daily by the human body is about three quarts. Of this a greater or less proportion is taken in food, so that at times only from a pint to a quart need be taken in the form of water as such.

Next in importance to quantity is the quality, dependent somewhat upon the uses to which it is to be put. As a rule, the moderately soft waters are the best for any purpose. For drinking purposes water must be free from dangers to health in the way of poisonous metals, decomposing matters, and disease-germs. For domestic use economy requires

that it should not decompose too much soap. Manufacturing interests require that it should not give too much scale to boilers; for agriculture there should not be too much alkali.

From the nature of things, no one family or city can have sole control of a given body of water. Those on the highlands may have the first use of the water, which then percolates to a lower level and is used by the people on the slopes over and over before it reaches the sea to start again on its cycle of vapor, cloud and rain, brook and river. Although receiving impurities each time, there are many beneficent influences at work to overcome the evils resulting from this repeated use. That which is dissolved from one portion of earth may be deposited on another. As the plant is the scavenger of the air, withdrawing the carbon dioxide with which it would otherwise become loaded, so the water has also its plant life, purifying it and withdrawing that which would otherwise soon render it unfit for any use.

Pure water is found only in the chemical laboratory; the most that can be hoped for is that human beings may secure for themselves water which is safe to drink, which will not impair the efficiency of the human machine.

The importance of the third essential for human life, food, and the close interdependence of all three, may be clearly shown. Of little use is it to provide pure air and clean water if the substances eaten are not capable of combining with the oxygen of the air or of being dissolved in the water or the digestive juices; of less use still is it to partake of substances which act as irritants and poisons on the tissues which they should nourish, and thus prevent healthful metabolism and respiratory exchange.

And yet a large majority of those who have acquired some notion of the meaning and importance of pure air and

are beginning to consider it worth while to strive for clean water pay not the least attention to the sanitary qualities of food; the palatable and æsthetic aspects only appeal to them.

Steam-power is produced by the combustion of coal or oil. Human force is derived by releasing the stored energy of the food in the body. The delicately balanced mechanism of the human body suffers even more from friction than the most sensitive machine, and the greatest loss of potential human energy occurs through ignorance, carelessness, and reckless disregard of nature's laws in regard to food.

It is necessary to know, first, what is the normal composition of a given food-material. This is found by analyses of many typical samples. Second, is the sample under consideration normal? To answer this requires an analysis of it, and a comparison of the results with standards. If it is not normal, in what way does it depart from the standard both in healthfulness and in quality? Third, if a food-substance is normal, what are its valuable ingredients and in what proportions are they to be used in the daily diet?

In regard to meat, milk, and fish, the sanitary aspect for the chemist resolves itself into two questions: Is the substance so changed as to become a possible source of poisonous products? Or has anything in the nature of a preservative been added to it? If so, is it of a nature injurious to man?

There is, however, a great range of *quality* in some of the most abundant foodstuffs, such as the cereals, especially in the nitrogen content. This is most important to the vegetarian and to institutions where economy must be practised. The following variations in the composition of leading cereals will illustrate:

	Water.	Nitrogenous Substance.	Crude Fat.	Carbo-hydrates.	Fibre.	Ash.
Oats, maximum.....	20.80	18.84	10.65	64.63	20.08	8.64
" minimum	6.21	6.00	2.11	48.69	4.45	1.34
" American hulled.	12.11	13.57	7.68	63.37	1.30	2.03
Corn, maximum.....	22.20	14.31	8.87	52.08	7.71	3.93
" minimum	4.68	5.55	1.73	72.75	0.99	0.82

One sample of wheat flour may contain 14 per cent. of nitrogenous substance, another may yield only 9. A day's ration, 500 grams, will give 70 grams of gluten, etc., in the one case and only 45 in the other. This difference of 25 grams would be a serious factor in the dietary of an institution where little additional proteid is given, and it alone might be the cause of dangerous under-nutrition.

The next step would naturally be to determine how definitely these varying percentages mean varying nutrition. To this end a study of vegetable nitrogenous products in their combination or contact with cellulose, starch, and mineral matter is needed. Much work remains to be done before these questions can be even approximately answered.

At the low cost of one cent a pound, common vegetables yield only about one-fifth as much nutriment as one cent's worth of flour, yet they contain essential elements and deserve to be carefully studied.

Dried fruits and nuts are much undervalued as articles of food, as are rice and lentils. (See table, page 150.)

The discussion of food values will be found in Chapter VIII.

Probably the widest field for the sanitary chemist to-day is the study of the so-called predigested foods, infant foods, " hygienic " preparations, two-minute cereals, and the countless proprietary packages, which, designed to meet the demand for quick results, prove traps for the unwary.

Therefore the sanitary aspect of food demands a study

of normal food and food value even more than of adulterants or of poisonous food, ptomaines and toxines. The cultivation of intelligent public opinion is most important, and each student should go out from a sanitary laboratory a missionary to his fellow men. That is, the office of a laboratory of sanitary chemistry should be so to diffuse knowledge as to make it impossible for educated people to be deluded by the representations of unprincipled dealers. Freedom from superstition is just as important in this as in the domain of astronomy or physics. So long as chemists are employed by manufacturing concerns in making adulterated and fraudulent foodstuffs, so long must other chemists be employed in protecting the people until the public in general becomes wiser. A part of the common knowledge of the race should be the essentials of healthful living, in order that the full measure of human progress may be enjoyed.

There is needed a greater respect for food and its functions in the human body, a better knowledge of its effect on the daily output of energy, its absolute relations to health and life, and the enjoyment of the same. The familiarity with these facts which is given by a few hours' work in the laboratory will make a lasting impression and will enable the student to benefit his whole life, even if he never uses it professionally. It is purely scientific knowledge, just as much as that derived from a study of the phases of the moon or the formulæ of integration.

The variety of operations in such work, calling for great diversity of apparatus and methods, is an educational factor not to be overlooked in laboratory training.

For all detailed discussions and methods the reader is referred to such works as those of Wiley, Allen, Leach, etc., but for the student who needs to study, as a part of general *education*, only typical substances, and such methods as can

be carried out within the limits of laboratory exercises in a college curriculum, the following pages are written. Not enough is given to frighten or discourage the student, but enough, it is hoped, to arouse an interest which will impel him at every subsequent opportunity to seek for more and wider knowledge.

Food is too generally regarded as a private, individual matter rather than as a branch of social economy; it is, however, too fundamental to the welfare of the race to be neglected. Society, in order to protect itself, must take cognizance of the questions relative to food and nutrition.

Formerly each race adapted itself to its environment and trained its digestion in accordance with the available food supply. In America to-day the question is not how to get food *enough*, but how to choose from the bewildering variety offered that which shall best promote the health and develop the powers of the human being, and, what is of equal importance, how to avoid over-indulgence, which weakens the moral fibre and lessens mental and physical efficiency. In spite of all preaching, few really believe that plain living goes with high thinking. Professor Patten says that the ideal of health is to obtain *complete* nutrition. Over-nutrition as well as under-nutrition weakens the body and subjects it to evils that make it incapable of survival.

No other form of social service will give so full a return for effort expended as the help given toward better diet for children and students. Fortunately help is coming fast. The United States Government is giving much study to food problems, and by publications is making available the work of other countries. The later bulletins listed in the bibliography at the end of this volume are especially valuable. What is now needed is a general recognition of the importance of the subject.

CHAPTER II.

AIR: COMPOSITION; IMPURITIES; RELATION TO HUMAN LIFE.

THE average adult human being makes about eighteen involuntary respirations per minute. The tidal volume of air is from 300 to 500 cubic centimeters (30 cu. in.), about 2800 cubic centimeters (170 cu. in.) remaining in the lungs unless voluntarily expelled by deep breathing. The total volume expelled is often called the *vital capacity*, and is about 3400 cubic centimeters for men and 2500 for women. Even when at rest a volume of 7000 to 12,000 liters (250 to 420 cu. ft.) of air passes through the lungs of each individual in twenty-four hours. Under conditions of exercise more or less prolonged or violent this volume may be doubled. The composition of the normal inspired air by volume is approximately: nitrogen and argon 79 per cent., oxygen 20.9 per cent., other constituents 0.1 per cent. The air as it leaves the lungs contains nitrogen 79.5 per cent., oxygen 16.0 per cent., carbon dioxide 4.4 per cent., and is saturated with water-vapor. There has therefore taken place an interchange of gases (called the *respiratory exchange*), by which oxygen has passed into the fluids of the body, and carbon dioxide into the air contained within the lung-cells. Only about one-fifth of the total oxygen is abstracted during each tide.

If the composition of the inspired air varies from the

normal, this exchange is disturbed, owing to the difference in gaseous pressure and in rate of absorption which this variation causes. So delicate is the balance of the active forces that serious disturbance of the functions of the living organism occurs if the percentage of oxygen is lessened by one or two tenths, or if the pressure is raised or lowered by a fraction of an atmosphere. It is true that, like a tree bending before the wind, the organism soon adapts itself to changed circumstances, provided the change is not too great nor too suddenly made; but, like the exposed tree, the living being is never quite so vigorous and symmetrical as it would have been without the effort to overcome disadvantageous conditions.

That a permanent or habitual lowering of the oxygen in inspired air must be harmful will be readily seen from a consideration of the office of this gas in the body. To Lavoisier and Laplace we owe the knowledge that animal heat is derived from a process of combustion. Lavoisier held, however, that the seat of this combustion was in the lungs, and it is to Pflüger and his pupils that we are indebted for the proofs that it is in the tissues themselves, while the lungs serve as a clearing-house or centre of exchange.

By the union of the oxygen with the substances found in the tissues and brought to them by the circulating fluids of the body from the digested food, the heat necessary for the life and work of the body is produced. This heat is needed to keep the tissues at the temperature at which they can best accomplish their work, to give mechanical power for the involuntary action of heart and lungs, for the processes of assimilation, and to furnish the energy for all voluntary work and thought. Thus both water and food are intimately concerned in the processes in which air is an essential factor. The statement made in the first sentence of Chapter I is

therefore justified, namely, that air, water, and food together are three essentials of human existence. A certain relation between the three means health, and any disturbance of this relation means unhealth, by which term may be designated a condition of less than perfect health not yet so serious as to be called sickness.

Air being a mere mixture of the gases nitrogen and oxygen, in no definite atomic proportions, and carrying varying amounts of other substances, gaseous and suspended particles, no definite composition can be given. The difference between the air over sea or forest plateau and that of city streets or of crowded tenements seems only slight if expressed in per cent. From 20.98 per cent. of oxygen in the first to 20.87 and 20.60 in the last; from .022 per cent. of carbon dioxide in the purest air to .045 in cities and .33 in rooms, are the common variations; and yet the effect of these apparently small differences on human beings subjected to them is very noticeable. It is customary to enhance these differences by expressing the results in parts per 10,000.

That the carbon dioxide is of itself a disturbing factor is indicated by the observed fact that air which has had the per cent. of oxygen reduced by combustion to a point at which a candle will no longer burn may be made again a supporter of combustion by the removal of the carbon dioxide.

A practical application of this principle is made in the devices used in diving and in entering mines filled with irrespirable gases.

There is a sensible effort in breathing, and a feeling of discomfort is usually experienced, if the carbon dioxide accumulates to ten times the normal amount, or 40 parts per 10,000 instead of 4. This is probably due to its solubility and to its interference with the respiratory exchange, since the interchange of gases is influenced by their "partial pres-

sures." Each gas forming part of a mechanical mixture exerts a partial pressure proportional to its percentage of the mixture. For example, if atmospheric air, containing 20.81 per cent. of oxygen, is at 760 millimeters barometric pressure, the partial pressure of the oxygen would be $\frac{20.81}{100} \times 760 = 158.15$ millimeters. The following partial pressures of oxygen and carbon dioxide in inspired air and in the lung-cells show the extent of variation in different parts of the respiratory tract:

	Inspired Air.	Lung-cells.
Oxygen	158.15 mm.	122 mm.
Carbon dioxide....	0.30 mm.	38 mm.

Gas will always tend to diffuse from the region of highest to that of lowest pressure. Hence the reason for the great influence of pressure in causing the diffusion of oxygen from the inspired air into the lung-cells and for the converse movement of carbon dioxide. That *variation* in pressure has much to do with the discomfort is shown in the so-called mountain-sickness, experienced at high altitudes in rarefied air, and in the so-called caisson-disease, developed in men working in compressed air. If the passage from the caissons to the open air is made gradually, there is little trouble, but a quick change is often dangerous. A sort of mountain-sickness is experienced by many on entering a close room from the outside air. Usually this passes away in a measure as the organism accommodates itself to the new conditions. Even if the symptoms are not severe, there is a dulness or an irritability which is not conducive to the best apprehension of a difficult subject or to the fullest enjoyment of an entertainment.

This lessening of mental capacity is especially to be de-

plored in the case of school-children, who are at an age when respiration is most frequent and the need of pure air the greatest, and also when economy of effort is most demanded.

It has been said that from the study of the physiological effects of close air it seems to be indicated that the evil is due to the change in the respiratory quotient and to the consequent change in blood-pressure, which interferes with the circulation. The respiratory quotient is obtained by dividing the volume of carbon dioxide given off by that of the oxygen absorbed, and indicates how much of the oxygen has combined with carbon to form carbon dioxide, since one volume of oxygen combines with carbon to form one volume of carbon dioxide. The rate of exchange is influenced by questions of pressure, exposure, temperature, and water-vapor or moisture, muscular activity, and the like.

Water-vapor is the most variable constituent, due to the changing capacity of air for moisture at different temperatures and to the character of the earth's surface. Whether over land or water, cultivated or forest region, air at 0° C. contains only 4.87 grams of water per cubic meter, while air at 60° F. (15° C.) can take up 12.76 grams, and at 90° F. holds 33.92 grams. Since the human body is constantly giving off moisture from skin and lungs, and since this exhalation is an important factor in the bodily economy, the presence of excessive moisture in the air exercises a decided effect.

On clear, invigorating days the moisture in the air may be only 30 or 50 per cent. of that required for complete saturation at the given temperature, and although the thermometer reading may indicate 85° F. on a hot day, little discomfort follows; but let the humidity rise to 90 or 95 per cent. while the temperature remains the same, and oppression, restlessness, or languor results. Much the same effects are seen in the case of close rooms and crowded halls. The

watery vapor given off (about 20 grams per person per hour) soon saturates the air, and the consequent drowsiness and headache usually attributed to carbon dioxide will be felt; while if this moisture is removed, the same proportion of carbon dioxide would hardly inconvenience the occupants. A relative humidity of 60 per cent. is said to be the most comfortable for house temperature.

In normal man, exposure to cold increases the respiratory exchange; but if he represses shivering and keeps still by force of will, it apparently does not. Politely sitting still increases the probability of taking cold. A high temperature lessens the production of carbon dioxide and therefore saves food. This may in part account for the oppressiveness felt by well-fed and warmly clothed persons in public places none too warm for those with a more restricted diet.

Muscular activity increases respiratory exchange and causes a demand for food. A class of students passing across the campus, up several flights of stairs, into a lecture-room vitiate the air for the first ten minutes at a rate higher by one part of carbon dioxide per 10,000 than half an hour later. The exchange is also stimulated by a meal. Not only the oxidation of the food itself, but the muscular activity of the alimentary canal and probably other accompanying activities call for an expenditure of energy which is supplied by increased heat production.

Sodium sulphate is said to increase the various respiratory activities, and some have held this fact to be one reason for the beneficial effects of certain mineral waters.

The amount of carbon dioxide expired is estimated by Pettenkofer at .006 to .012 cubic foot per pound of body weight, according to the degree of exertion. Rubner considers that, in general, metabolic processes depend also upon the proportion of superficial area to the total volume of the

body, hence the smaller the animal the greater the surface to the whole mass. Children give off in proportion to their body weight about twice as much carbon dioxide as adults. Another estimate gives the output of carbon dioxide as .0027 gram per hour per square centimeter of surface.

Ammonia is also a constant component of the air of inhabited places and is washed out by rain and snow, as will be shown in Chapter VI.

Of the occasional impurities, probably the most fatal is carbon monoxide arising from leaking gas-fixtures or defective furnaces. This gas has 250 times the affinity for hæmoglobin and therefore forms with it a more stable compound than does oxygen, and hence its presence causes a deficiency of the latter gas in the blood, giving symptoms like those observed in mountain-climbing or balloon ascensions. When the blood-corpuscles become about one-third saturated the effect becomes sensible; but if the quantity of gas is considerable, the symptoms are hardly noticeable before insensibility occurs. For this reason, glowing charcoal and open gas-jets are the favorite forms of cowardly self-destruction.

In the neighborhood of factories, smelting-works, ore-heaps, and of cities burning soft coal there is a noticeable amount of sulphurous and sulphuric acids, sometimes so considerable as to destroy vegetation.

In places where gas is burned, oxides of nitrogen are formed in small quantity, the effect of which is known to be harmful. Minute quantities of hydrogen sulphide and of compounds of carbon and hydrogen and of other gases may be present, especially in houses with defective plumbing or in the neighborhood of barns, cesspools, and filthy back yards. These may reach dangerous proportions, but, like carbon

monoxide, should not be permitted in or near any well-regulated household.

Soot, being insoluble, accumulates in the lungs, as a *post-mortem* examination of persons who have lived for some time in a smoky city proves; nevertheless no definite ill effects have been as yet attributed to this cause. This again confirms the inference that it is the gaseous constituents, and the varying temperature and pressure, which seriously affect the respiratory exchange.

The following results, obtained on the air of a large manufacturing city, will be of interest in this connection: *

GRAMS PER 1,000,000 CUBIC METERS OF AIR.†

Soot.	H_2SO_4.	Free NH_3.	Alb. NH_3.	HNO_2.	HNO_3.
1000 to 40000	7000 to 63000[1]	100 to 1000	97 to 557	45 to 1063	0 to 155

[1] Partly H_2SO_3.

It is probable that much of the danger ascribed to sewer-air arises from other causes. Since the atmosphere in sewer-pipes is always moist, the only probable source of organisms is the splashing of the water. Only about one-half as many organisms have been found in the air above flowing sewage as in out-door air. Professor Carnelley and Dr. Haldane found only one-half as much carbon dioxide and one-third as much organic matter in such air as in that of the streets above.

Beyond individual control, and in a measure beyond general control, there exists suspended matter in the air: fine volcanic dust, pollen, spores of moulds and algæ, dried bacteria, diatoms, small seeds of plants, soot and the finely pulverized earth from roads and cultivated and barren lands. To this portion of the air we owe beautiful sunsets and disagreeable fogs. To it many affections of the throat and

* Mabery: *J. Am. Chem. Soc.*, 17 (*1895*) 105.

† See also Bailey: "The Air of Large Towns," *Science*, Oct. 13, 1893. Irwin: "The Soot Deposited on Manchester Snow," *J. Soc. Chem. Ind.* (*1902*), 533.

eyes are due, and by it disease may be transmitted. Some kinds of dust lodge in the air-cells and by irritation render the individual liable to disease, as statistics of the mortality in dust-producing trades show. In the air of houses this impurity increases a thousand-fold by means of the wear of furnishings and the accumulation on them of deposited particles, by means of furnace-ashes and dried *débris* of all kinds. Only recently have the dangers of this part of the air we breathe been distinctly pointed out.

Aitken * estimated that a cubic inch of air may carry 2000 dust-particles in the open country, 3,000,000 and more in cities, and 30,000,000 in inhabited rooms. Among these millions there may be found from ten to several hundred micro-organisms, moulds, and bacteria, and, under certain conditions, pathogenic germs.

As methods of culture become more satisfactory and tests more universal, it may be demonstrated that many old or long-inhabited buildings furnish several varieties of pathogenic germs constantly to the air.

According to some authorities, the most dangerous contamination of the air is the "crowd-poison," or organic matter given off with the carbon dioxide and moisture in the breath. References will be found in the bibliography to discussions of the subject. No evidence has ever been found in the course of investigations in this laboratory, covering a period of twenty-five years, that *the healthy* human lung gives off any toxic substance. The same conclusion is reached by Dr. Emanuel Formánek of the Hygienic Institute at Prague after a long series of critical experiments.†

* *Nature*, 31 (*1870*), 265; 41 (*1880*), 394.

† *Archiv für Hygiene*, 38 (*1900*), 1.

CHAPTER III.

THE PROBLEM OF VENTILATION.

FROM the preceding chapter it will be seen how important is the purity of the air to human well-being, and how essential is the diffusion of the knowledge of the methods by which it can be secured. It is often said that artificial ventilation is a modern necessity. Remains of aqueducts and sewers have testified to the sanitary intelligence of historic peoples, but the ventilating fan does not seem to have been included, although natural ventilation by shafts and flues has been practised since man came out of cave-dwellings. It is true that customs have changed as to many items of daily life. In cities more people live on an acre of ground, thus fouling the air above and the ground beneath; more factories are belching smoke; more coal is burned; houses are built with smaller rooms and less pervious walls; schools and lecture-halls are more crowded; people are better fed, consequently there is more garbage; streets are macadamized, allowing finely ground particles to fill the air with every puff of wind; gas-pipes traverse the walls of every house and pass under every street; carpets, draperies, and much passing in and out cause an accumulation of dust unknown fifty years ago. Kerosene lamps require more oxygen than many candles. Besides, people are becoming less hardy and more sensitive physically, so that well-ventilated living-spaces are a modern necessity if human efficiency is to be maintained.

As we have seen, the air of open spaces presents only very slight variation at the same level or for several thousand feet above it. The movement of the air caused by the wind is usually so rapid, and the reservoir of air for many miles above the earth is so immense in comparison with the thin vitiated layer, that there are only to be considered enclosed spaces in which human beings remain for a period of time.

To supply the 7000 to 12,000 liters (250 to 430 cubic feet) of tidal air per person in maximum purity, there must be brought to the person at rest some 1800 cubic feet of air per hour. If he were in an air-tight chamber 12 feet square and 8 feet high, a man would reach the limit of purity in 38 minutes; but no ordinary room is air-tight, and when the difference between inside and outside temperature is considerable, a rapid exchange is taking place even with doors and windows shut.

To secure the passage of this large volume of air through a small space without causing a draft that will be objected to by the abnormally sensitive victim of modern luxurious habits is the problem of ventilation—one not yet satisfactorily solved.

The sanitary engineer is expected to design the apparatus and to aid the architect in so placing and proportioning flues, inlets, and outlets as to accomplish the desired results. Unfortunately it is too common, especially in the case of school and college buildings, to economize in the first cost by dispensing with the services of the expert and to leave to the builder and "practical" architect all such details. In any case, it often becomes necessary to call in the chemist to prove the need of reform, or to show by the composition of the air whether or not the ventilating plant is doing its work efficiently.

The sanitary inspector, whose business it is to decide

upon the legal questions connected with tenements and factories, must often rely upon chemical examinations of the air. The validity of these depends not only upon the perfection and delicacy of apparatus and methods used, but also upon the judgment and intelligence with which the samples are taken.

Many errors in the construction of buildings have been perpetrated because of an ignorance of the physical properties of air and, consequently, a mistaken notion of the behavior of a vitiated atmosphere. The lecturer on popular science who some forty years ago enlightened (?) the community on the chemistry of daily life was accustomed to use, as a striking illustration, a glass jar in which a small lighted candle was instantly extinguished on pouring into the jar a tumblerful of carbon dioxide which had been collected for the purpose. The inference was plain: carbon dioxide was heavier than air, therefore it falls to the floor and must be allowed to flow out as if it were a stream of water. Further confirmation of this inference was found in the frequently observed fact that a candle lowered into a well often went out just before the water was reached.

Hence for many years the habits of thoughtful persons were formed on a belief in the heaviness of carbon dioxide or "bad air," and in its tendency to go to the bottom of the room and into any holes it could find. This is only another instance of danger in half a truth. When do we find cold carbon dioxide generated in living-rooms? And how warm must the gas be in order to be lighter than the ordinary air? How quickly does diffusion take place? Until within a very few years the almost unanimous belief among the so-called educated classes was that the bad air could be let out by opening a window at the bottom, and, in spite of the lessons which might have been learned by any observant person in

hanging pictures or Christmas greens, the common practice in private houses, churches, and schools is to open the windows at the bottom.

All ordinary vitiation of the air proceeds from a heated source. Human breath and warm air are lighter than cold air and rise even with their burden of carbon dioxide. It is only when they impinge on a very much colder surface, as on the window-pane on a very cold day, that they become sufficiently chilled to fall without mixing with the neighboring air. The freedom with which the gases of the air mix, as well as the rapidity of the action, may be illustrated in a variety of ways. Open a bottle of any volatile and pungent substance, as ammonia or hydrogen sulphide, in one corner of a room, and almost instantly it may be perceived in the most distant part.

In natural ventilation we have only to avail ourselves of these characteristic properties of gases; and whether we wish to get rid of the light gases escaping from furnace, stove, or gas-pipe, or of the specifically heavier carbon dioxide, or of the most dangerous dust, we must furnish an outlet at the place to which the fleeing enemy first arrives, lest it turn and rend us for our ignorance.

It is usually sufficient to furnish this opportunity, the current caused by this willing escape drawing in sufficient fresh air to take its place except in very crowded rooms, and even these might be so ventilated provided the whole roof were one large ventilating flue. If, however, the air is to be drawn from the bottom of the room, its unwilling current must be pulled by a superior force, as by an open fire on the hearth, which heats the air above it so that, in rushing into the free air above, it draws after it all things movable within reach. Then, indeed, even the top of the room becomes quickly cleared and no corner can escape; but if the fire be

long gone out and the chimney cold, the reverse takes place and cold, heavy air sinks to the floor, helping to confine the bad air at the top of the room.

What the cold chimney cannot accomplish the mechanically driven fan can do, namely, by a slight compression force a draught even up a cold chimney. In this case the very unwillingness of the air to take the prescribed path helps in the result as water forced through a mill-wheel develops mechanical work. The warmed fresh air forced in near the top of the room loses its velocity as it mingles with that already present, and finds its way along the line of least resistance to the opening provided at the bottom of the room, into the flue, but only in case there is no easier way.

Open doors or windows interfere with the prescribed course, and blindness to this fact on the part of the occupants of mechanically ventilated buildings has caused unjust complaints of the system. The necessity of regulating the consumption of fuel and admission of fresh air in accordance with variations of temperature, as well as the great care and trouble this involves, renders the " natural " system of ventilation practicable only in less crowded dwelling-houses where intelligence can control the varying factors. For schools, lecture-halls, or any enclosed spaces occupied by numbers of persons at one time, some form of mechanical ventilation offers the only hope of good air in cold climates. What form that shall take is for the engineer to decide. The chemist's part is to devise means of readily determining whether the persons in charge of the apparatus are using it to gain the results designed by the expert.

As a test of how nearly practice approaches the theoretical value, carbon dioxide is taken as the indicator, since it is present in a thousand times larger quantity than any other impurity and since it is easily determined. If the air has

only the normal amount of carbon dioxide, it is but rarely that it contains enough of anything else to be harmful. The presence of hydrogen sulphide or of coal-gas is betrayed by the odor. Where the gas-supply is "water-gas," containing 30 to 40 per cent. of carbon monoxide, there is greater danger; but if legal restrictions are complied with, the presence of this can be detected in the same way, viz., by the odor.

Danger may also arise from the presence of so-called "sewer-gas," which, however, is not a single gas, but a most complex and variable mixture of the more volatile products of decomposition. For the detection of "sewer-air" chemical tests are of little value, since it contains no constituent in sufficient quantity and with sufficient regularity to serve as an index of its presence. Ill-smelling gases are given off only when sewage is about eighteen hours old, hence dirty house-pipes are the chief cause of foul air. The delicate sense of smell is of value here. Indeed, an educated nose is most essential in all examinations of house-air. "Crowd-poison," if it exists, keeps company with the increase of the products of respiration, and if the incoming air is strained or taken from a place free from dust, the particles added to the air which is in the rooms will also be removed with the carbon dioxide.

From nearly all points of view, carbon dioxide is an indicator of the efficiency of ventilation, especially if combined with observations of temperature and moisture. It is an indicator also readily understood and accepted by the public.

The principles of ventilation may be readily illustrated to a class by means of simple apparatus. Such an apparatus, using candles and designed to illustrate the section of an ordinary room, is shown in Fig. 1.

In testing the efficiency of ventilation of any room or

building, it is necessary to determine first the direction of the air-currents, for there can be no ventilation without currents. If the architect who designed the building, or the engineer who advised the architect, is responsible, then the chemist has only to follow directions in taking the samples; but frequently the chemist, as well as the sanitary engineer, is called

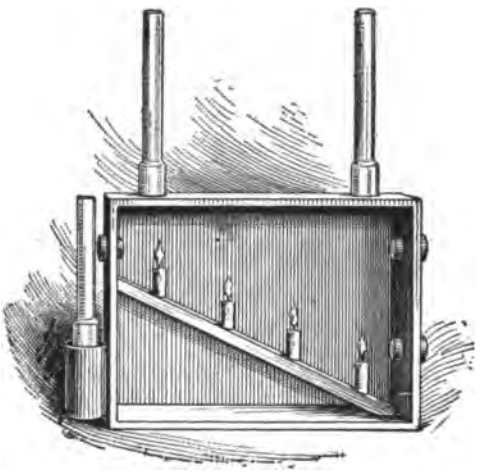

FIG. 1.—Apparatus to Illustrate the Principles of Ventilation.

upon to make tests of rooms and buildings of which no plans are available.

In the examination of such rooms, then, the position of flues or conduits, both inlets and outlets, which were intended to convey air or which serve without such intention, should first be located. Possible avenues of ingress and egress by means of loose windows, cracks around doors, etc., are to be considered. When there is great difference of temperature between outer and inner air, these allow of quite rapid change of air. Some means of rendering visible these currents is desirable, such as smouldering paper, magnesium powder, or fumes of ammonium chloride.

When the direction and intensity of these air-currents have been determined, the places from which the air-samples are to be taken may be chosen. It will be evident in what part of the room stagnation occurs and where eddies are formed, also where the air escapes.

In a room or building without artificial ventilation the air-currents are seen to be ascending until they become chilled, when they fall. An empty room will not show so decidedly the rise of air-currents as will an occupied one in which the vitiated air, being much warmer, rises more rapidly and cools less quickly. In taking the samples all accidental means of contamination must be avoided and the occupants must be quiet, for the moving of persons causes disturbance in the air-current. There is room for great ingenuity in this part of the examination, as circumstances greatly modify the method of procedure. A fair sample, or a sufficient number of samples to give a fair average, must be taken.

Having secured and analyzed the samples of air, the decision as to the efficiency of ventilation must be rendered.

If the room examined is a study- or recitation-room, the stratum of air at the level of the students' heads should not contain over 8 or 9 parts per 10,000 of carbon dioxide, should not show a temperature of over 70° F., nor a humidity of over 35 or 50 per cent., and these conditions should be maintained for hours at a time.

For lecture-halls and spaces occupied for only one hour at a time, with ample time between occupation, it is admissible to allow 9 to 11 parts. If fan ventilation is used, the outlet should give the average degree of contamination. If no system is used, the air at the top of the room is first vitiated; only at the end of twenty minutes to half an hour do the lower layers begin to show it.

CHAPTER IV.

ANALYTICAL METHODS. DETERMINATION OF CARBON DIOXIDE.

General Statements.—Since the earliest crude attempts at the determination of carbon dioxide all chemical methods have been based on its absorption by alkalies or alkaline earths. It may be the diminution in volume of the air through absorption of the carbon dioxide that is measured; the carbon dioxide may be separated as barium carbonate and weighed; the reduced alkalinity of the absorbing liquid may be determined; or the carbon dioxide may be set free from the absorbing solution and its volume determined directly; all of these methods have been used with more or less success. For determining with great exactness the amount in out-door or "fresh" air it is customary to aspirate large quantities of air, sometimes as much as 600 liters, through the absorbing solution. For determining the amount in the air of rooms a much smaller sample, collected in calibrated vessels, of from one to eight liters, is preferable.

Where it is necessary to absorb large quantities of the gas in a slight volume of solution, potassium or sodium hydroxide is used. For nearly all of the "popular tests" calcium hydroxide, lime-water, is used because of its harmless nature and the ease with which it can be obtained from the corner drug store, or from the quicklime procured from the mason's barrel. For volumetric methods barium hydroxide is generally preferred, because of the less solubility of the

barium carbonate, it being only about two-thirds as soluble as the calcium salt. The very avidity with which these substances take up carbon dioxide is a hindrance to the preparation of standard solutions in an atmosphere already rich in it. When once prepared the solution must be preserved with especial care, since contact with the hands or a whiff of the breath will reduce its strength and vitiate the results. All such solutions are best kept in bottles well protected from the air by tubes filled with soda-lime and delivered from a burette, as described on page 36.

Pettenkofer Method.—The method which for many years was generally employed for the estimation of carbon dioxide in the air of rooms is some modification of that originally devised by Pettenkofer.*

Principle.—In principle this consists in absorbing the carbon dioxide from a known volume of air in barium hydroxide solution and titrating the excess with standard sulphuric acid. It is essential for the *complete* absorption of the carbon dioxide that the barium hydroxide be *largely* in excess, so that not more than one-fifth of it is neutralized; furthermore, the absorbing solution must be shaken up with the air for a considerable time.

Collecting the Samples.—The samples are collected in four- or eight-liter bottles, the volume of which is accurately known, the bottles having been calibrated by weighing them filled with water. These bottles are provided with a rubber stopper carrying a glass tube over which a rubber nipple is slipped. They are filled with the air to be tested by means of a pair of nine-inch blacksmith's bellows, fitted with valves so arranged as to draw the air out of the bottle. The bellows is connected with a three-quarter-inch brass

* Pettenkofer: *Annalen*, 2, Supp. Band (*1862*), p. 1. Gill: *Analyst*, 17 (*1892*), 184.

tube reaching nearly to the bottom of the bottle; fifteen or twenty strokes should be sufficient to replace the air in a four-liter bottle. At the time of collecting the samples the following observations should be recorded: *Room, date, time, weather, place in room, number of people present, number of gas-jets or lamps burning, condition of the doors, windows, and transoms; in short, everything that would tend to affect the amount of carbon dioxide in the air, or to cause currents or eddies.* The bottles should be distinctly labelled and their volumes recorded. If the temperature at the point where the samples are collected should be essentially different from that of the laboratory, the bottles should be allowed to stand in the laboratory for half an hour, or until they have attained its temperature.

Directions for Laboratory Work.—The solutions of barium hydroxide and sulphuric acid which are used are approximately of equal strength; but since it is impracticable to prepare exact solutions of barium hydroxide and to keep them without change, the exact value of the barium hydroxide solution must be found by titration against the standard sulphuric acid, which is made of such a strength that 1 cubic centimeter is equivalent to exactly 1 milligram of CO_2. This standardization, as well as the subsequent titration, is best made in a small flask to lessen the error from absorption of carbon dioxide from the air. It will be found most generally satisfactory to measure into the flask about 25 c.c. of the barium hydroxide, add a drop of phenolphthalein solution, and titrate with the sulphuric acid to the disappearance of the pink color. In all cases the first end-point should be taken as the correct one, because the pink color will sometimes return on standing. This is due to the presence of minute quantities of potassium or sodium hydroxide in the solution. The alkali sulphates will react

with any barium carbonate which may be suspended in the liquid with the formation of alkali carbonates which give a pink color with phenolphthalein.* The standardization should be repeated until consecutive results are obtained which check within 0.2 per cent. of each other.

Determination.—Remove the cap from the tube in the stopper of the bottle, insert the tube-tip of the burette so that it projects into the bottle, and run in rapidly 50 c.c of barium hydroxide from the burette. Replace the cap and spread the solution completely over the sides of the bottle while waiting three minutes for the burette to drain. In doing this take care that none of the solution gets into the cap. Note carefully the temperature and barometric pressure. Place the bottle on its side and roll or shake it at frequent intervals for forty-five minutes, taking care that the whole surface of the bottle is moistened with the solution each time. At the end of this time thoroughly shake the bottle to mix the solution, remove the cap, and pour the solution into a stoppered bottle of hard glass of 40 c.c. capacity, taking care that the solution shall come in contact with the air as little as possible. Under these conditions a full well-stoppered bottle may safely stand for days before titration. For the titration, measure out with a pipette 25 c.c. of the clear liquid into a 75-c.c. flask and titrate it with the sulphuric acid as in the standardization. The difference between the number of cubic centimeters of standard acid required to neutralize the total barium hydroxide before and after absorption gives the number of milligrams of dry carbon dioxide in the sample tested. The results may be expressed in parts per 10,000, by volume, under

* This action can be largely prevented by including a small amount of barium chloride when making up the barium hydroxide solution (see p. 247.)

standard conditions (0° and 760 mm.), saturated with moisture (Method 1) or dry (Method 2). Tables for this purpose will be found in Appendix A.*

Example.—Data: Standardization, 1 c.c. Ba $(OH)_2$ = 1.020 c.c. H_2SO_4; volume of bottle = 8490 c.c.; $Ba(OH)_2$ used = 49.9 c.c.; H_2SO_4 used = 21.1 c.c.; temperature and pressure = 21° and 766 mm.

Before absorption

$$49.9 \text{ c.c. } Ba(OH)_2 = 49.9 \times 1.020 = 50.90 \text{ c.c. } H_2SO_4.$$

After absorption

$$49.9 \text{ c.c. } Ba(OH)_2 = \frac{49.9}{25} \times 21.1 = 42.12 \text{ c.c. } H_2SO_4.$$

$\therefore$ (8490—49.9) = 8440.1 c.c. air contain 50.90—42.12 = 8.78 mg. CO_2.

Method 1.—1 c.c. CO_2 saturated with moisture at 21° and 766 mm. weighs 1.79624 mg. (Table II, Appendix A).

$$\therefore \text{ 8.78 mg.} = \frac{8.78}{1.79624} = 4.887 \text{ c.c. } CO_2 \text{ saturated with moisture.}$$

Hence in 10,000 c.c. of air there are $\frac{4.887}{8440.1} \times 10{,}000 =$ 5.79 parts CO_2.

Method 2.—In this method the volume of air is reduced to standard conditions of temperature and pressure, under which conditions the weight of a cubic centimeter of dry CO_2 is a constant quantity.

Thus $v' = v[1 + 0.00366(t' - t^\circ)]$. $v' = 8440.1$, $t' = 21°$, $t^\circ = 0°$; hence $v = 7837.7$ c.c.

---

* Dietrich's Table, the one in general use, is not absolutely correct, the weight of a cubic centimeter of carbon dioxide at 0° C. and 760 mm. being somewhat different from that given at present by the best authorities, but it is sufficiently close for any but the most exacting work.

Also, $v : v'' = H'' : H$, or $7837.7 : x = 760 : (766 - 18.5)$. (18.5 = tension aqueous vapor at 21°.)

Then $v'' = 7709$ c.c. = volume of air at 0° and 760 mm.

1 c.c. CO_2 at 0° and 760 mm. weighs 1.9643 mg.

$\frac{8.78}{1.9643} = 4.469$ c.c. CO_2. $\frac{4.469}{7709} \times 10{,}000 = 5.79$ parts CO_2 per 10,000.

Two samples are to be taken, closely following the notes, and the results calculated by both methods before collecting more samples. Then some one room may be taken and the quality of the air determined for the different hours of the day, or a comparison of different rooms may be made, or a building may be tested as a whole. All data and results obtained should be arranged in tabular form on a separate page of the note-book.

Notes.—This method of collecting the air in a large bottle possesses a decided advantage over the method of slowly drawing the air through barium hydroxide contained in a long tube, in that a sample represents the condition of the air at a given time and not its average condition for a period of an hour or so.

In collecting samples, care must be taken to avoid currents of air or the close proximity of people. Duplicate samples can be obtained only in empty or nearly empty rooms. Even two sides of the same room will probably show differences, but two samples taken carefully side by side ought to agree within 0.05 part per 10,000.

While the Pettenkofer method is convenient, and for a long time has been the favorite, it is now quite generally recognized that it contains inherent sources of error which can be obviated only by the use of complicated apparatus and extreme skill in manipulation. That the method can be employed to obtain results of the highest degree of accu-

racy has been shown by Letts and Blake* in an exhaustive study of the question. The refinements found necessary, however, place their modification out of consideration for ordinary use.

The principal source of error lies in the necessity for titrating the alkaline liquid within the "area of contamination," the exhaled breath containing on an average from 50 to 100 times as much carbon dioxide as the air under examination. Other important sources of error which have been found to lead to erroneous results are the action of the caustic alkali on the glass of the large bottle, and the presence of small amounts of the precipitated barium carbonate in the solution during the titration. It should therefore be borne in mind that results obtained by this method may be too high even though agreeing closely among themselves.

The small bottle to which the solution is transferred for settling should be of such a size (40 c.c.) that the volume which drains readily from the large bottle when the glass tube is flush with the stopper shall a little more than fill it. That is, no air-space should be left to serve as a medium for transpiration from the surrounding air if the bottle stand for some hours. On the other hand, there should be a sufficient excess over the 25 c.c needed to ensure the filling of the pipette at the first trial. This pipette is globular in shape, with a stem of small diameter above and below the bulb. The last drop is taken off by touching the neck of the flask after counting ten from the time it is empty. It is then set upright to drain; the drop which collects is gently shaken out before the next titration. The error is less than if it were rinsed with water each time.

All rubber stoppers which are used should first be boiled

* *Proc. Royal Dublin Soc.*, 9, 107 (1900).

in dilute caustic soda, then in a dilute solution of potassium bichromate and sulphuric acid and thoroughly washed.

Walker Method.—A comparatively simple method in which the errors inherent to the Pettenkofer process are avoided has been proposed by Walker.*

The method has been carefully studied in this laboratory † and found to be capable of great accuracy.

Principle.—To a definite volume of air, usually 1 to 2 liters, is added a measured amount of standard barium hydroxide, care being taken to avoid contact of the solution with the air. After the absorption of the carbon dioxide, the solution is filtered under reduced pressure through asbestos and the clear barium hydroxide received into a known excess of standard hydrochloric acid. The absorption vessel is rinsed out with water free from carbon dioxide. The excess of acid is then determined by titration with barium hydroxide.

Reagents and Apparatus.—The standard solutions used are N/50 hydrochloric acid, and barium hydroxide, approximately N/100, its exact strength relative to the acid being found daily by titration. It will be found advantageous to use solutions of this strength, somewhat more dilute than those recommended by Walker, on account of the increased accuracy with air nearly free from carbon dioxide. The decreased range of usefulness is readily compensated by the employment of smaller samples of the impure air.

The barium hydroxide, which is usually made up in quantities of 8 liters at a time, is preserved with especial care. The hard-glass bottle containing it, placed on a high shelf so that the measuring apparatus can be filled directly by gravity, is heavily coated on the inside with barium

* *J. Chem. Soc.*, 77, 1110 (1900).

† Woodman: *J. Am. Chem. Soc.*, 25, 150 (1903).

carbonate. The bottle is closed by a rubber stopper with two holes, one of which carries the siphon tube dipping to the bottom of the bottle and supplying the measuring burette, while the other carries a fairly large glass T (Fig. 2).

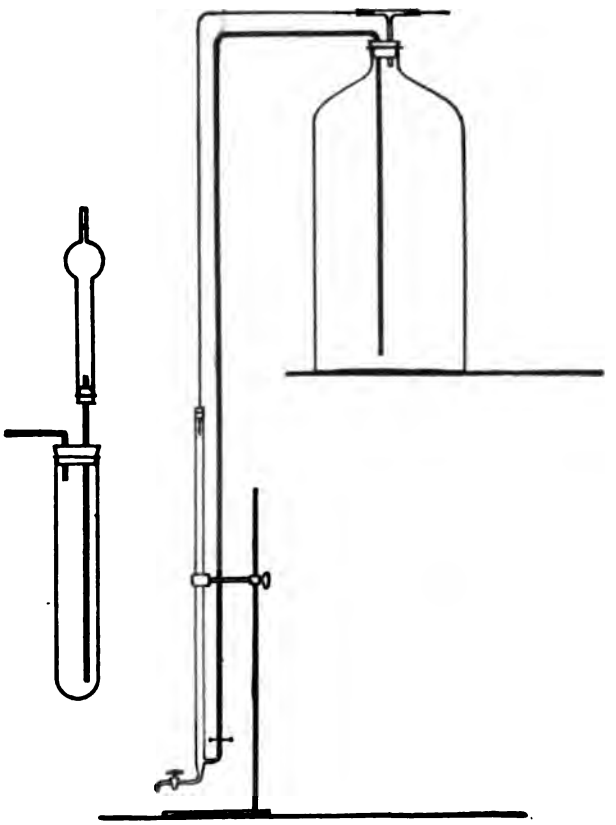

FIG. 2.

From one-half the horizontal arm of this projects a glass tube carrying the device for protecting the solution. This device is shown drawn on a somewhat larger scale in the same sketch. The horizontal tube enters the T tube far

enough to support the apparatus. Connection is made by a closely fitting rubber tube. The longer tube, reaching nearly to the bottom of the test-tube, carries a fairly good-sized "calcium chloride tube" which contains soda-lime, enclosed in the usual manner by plugs of cotton. The test-tube contains 5 to 10 c.c. of dilute (about N/50) caustic potash colored with phenolphthalein, the whole serving to indicate the efficiency of the soda-lime. From the other end of the horizontal arm of the T projects in the same way a long tube bent at right angles fitting by a rubber stopper into the top of the burette, thus making the whole a closed system, much after the manner of Blochmann.* Any air entering the bottle when the solution is drawn from the burette or when the burette is filled again must have come through the protecting apparatus. This will be found efficient if care is taken in the selection or preparation of the soda-lime.†

The burette used for the barium hydroxide is a glass-stoppered one, differing somewhat from the ordinary form. The lower portion below the graduations is narrowed and bent at right angles. This horizontal part is fitted with an ordinary glass stop-cock. This gives no trouble when kept well vaselined. The tip of the burette is kept covered with a little rubber cap when not in use to prevent clogging from the formation of carbonate. The apparatus could easily be arranged with a special pipette for the delivery of a definite charge of baryta solution if desired.

The bottles used for the collection of samples are of hard glass of about 2 liters capacity, the exact volume being determined in each case to a cubic centimeter. The bottle

* *Ann. Chem.* (Liebig), 237, 39 (*1887*).

† Directions for preparing a good quality of soda-lime are given by Benedict and Tower: *J. Am. Chem. Soc.*, 21, 396 (*1899*).

is closed by a rubber stopper through which pass two glass tubes about 7 mm. in diameter. The longer tube reaches almost to the bottom of the bottle; the shorter tube ends internally just flush with the stopper. Both tubes project externally about two inches and are provided with stop-

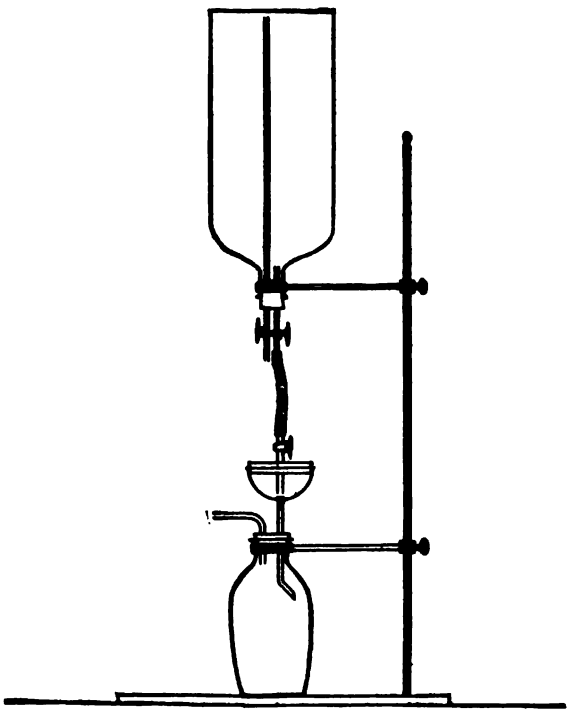

FIG. 3.

cocks at slightly different levels so as to permit of convenient manipulation. There is permanently attached to the upper end of the longer tube a piece of rubber tubing 1 inch in length which serves to connect it with the tip of the baryta burette. The stop-cocks may be replaced by rubber tubing and Mohr pinch-cocks if desired.

The apparatus used for filtering off the barium carbonate is shown in Fig. 3.

To the base of a ring-stand is firmly clamped an ordinary filter-bottle of about 250 c.c. capacity closed by a rubber stopper with two holes. Through one of these passes a tube leading to the suction-pump, through the other the tube of a Gooch filtering-funnel, the upper part of which is cut off so that the remainder above the constriction is about an inch long. The tip projecting into the bottle is bent so that the liquid shall flow down the side and not spatter. A rather close coil of stout platinum wire placed above the narrow portion serves as a support for the asbestos filter, or can be removed if it is desired to use a cotton plug instead. In the upper part of the tube is tightly fitted a rubber stopper through which passes a narrow glass tube extending to within one-eighth inch of the asbestos layer and provided above the stopper with a stop-cock. Connection is made with the short tube of the inverted bottle by means of a rubber tube about 8 inches in length.

Procedure.—(*a*) *The Absorption.*—Insert the tip of the baryta burette into the short piece of rubber tubing and run in approximately 50 c.c. with both stop-cocks open. Close the outlet cock, pinch the rubber tube with the fingers, detach it from the burette and insert a bit of glass rod to keep out the air. Finally close the stop-cock. Drain the burette three minutes and take the reading as usual. Carry out the absorption of the carbon dioxide as described in the Pettenkofer method, except that 25–30 minutes is ample for the absorption.

(*b*) *The Filtration.*—While the absorption is in progress prepare the filter. Apply slight suction and add enough asbestos fiber suspended in water to form a felt about a sixteenth of an inch thick over the platinum coil. Wash it

once or twice with distilled water. If properly done the water should flow from the filter-tube in a continuous stream when the pump is running at good speed, but should drop only slowly when the suction is slight.

Prepare also about 100 c.c. of "wash-water" by adding to distilled water 1 c.c. of a 10 per cent. barium chloride solution and three drops of phenolphthalein, then titrating with the barium hydroxide to a faint permanent pink. Keep in a stoppered flask until wanted.

Measure into the filter-bottle 25 c.c. of the hydrochloric acid.

The arrangement of the bottle and filter during filtration is shown in the figure.

Open the stop-cock of the shorter tube and turn on the pump. Now slowly open the filter stop-cock and control the flow of liquid entirely with this cock. The barium carbonate remains on the asbestos, and the clear baryta solution which passes through is at once neutralized by the hydrochloric acid. When all the liquid has passed through allow the pump to act for a few minutes to partially exhaust the bottle, then close the filter-cock.

Pour some of the wash-water into a small beaker, dip the end of the longer tube into it, and by opening the stop-cock allow about 20 c.c. to flow into the bottle before again closing it. Unclamp the bottle and shake thoroughly while held horizontally and still attached to the filter. Clamp it in place again, turn on the pump, and drain off the wash-water. Repeat this twice. Generally at the third washing the wash-water is no longer turned pink, showing that the barium hydroxide has been completely removed. Remove the stopper and cock from the filter-tube and draw the remainder of the wash-water through the filter to wash down the sides of the tube.

(*c*) *The Titration.*—Transfer the acid solution to a 6-inch porcelain dish and run in barium hydroxide to the production of a distinct pink color. Return the solution to the filter-bottle and pour it again into the dish. One or two drops of the alkali solution will suffice to finish the titration.

Note.—It will be seen that in this method the errors of the other are largely avoided. The alkali solution is made weaker, and its time of contact with the glass of the bottle is shorter; the barium carbonate is entirely removed if the filtration is properly conducted; the titration is not carried out in an alkaline solution, but in one that is acid.

For a discussion of the results obtained the papers cited above may be consulted.

Strong potassium hydroxide is undoubtedly the best absorbent for carbon dioxide and in all cases where delicate manipulation and expensive apparatus are not hindrances, some form of gas absorption apparatus is best. The measurement of the gas should be made over mercury and in a finely calibrated tube. Eimer and Amend now supply a modification of the Petterson and Palmquist apparatus which gives good results.

General Tests.—In addition to the above methods for determining carbon dioxide just described, there are general tests which can often be used with advantage. If within the space of a few hours some fifty or more tests are to be made, and comparative results rather than great accuracy are required, some simpler form of apparatus is desirable.

Such an apparatus, to be satisfactory, should meet, so far as possible, the following requirements:

(1) It should be sufficiently compact and portable to be carried in the hand from place to place.

(2) It should be as simple in construction as possible, and its use should not involve delicate measurements.

(3) If possible, the apparatus should be made entirely of glass, avoiding prolonged contact of corks or of rubber connectors with any dilute solution which may be used.

(4) It should be so constructed as to protect the solution at all times from the carbon dioxide of the air, especially while the determination is being made, because of necessity such an apparatus must be used within the area of contamination.

(5) The complete apparatus should be sufficient for fifty or more determinations.

(6) It must be capable of giving results of a reasonable degree of accuracy, say within 0.5 part of carbon dioxide in 10,000 parts of air, in the hands of persons having little or no chemical knowledge and minimum skill in manipulation.

(7) If a solution be used in the apparatus it should be one which can be prepared easily from chemicals readily obtained; the solution must maintain its efficiency for a reasonable length of time, if protected from external influences; and the solution should be one that is not at all dangerous or obnoxious to use.

Simplicity of apparatus is much to be desired, but it should not be gained at too great sacrifice of accuracy. Even when no greater precision is required than is necessary to meet the demands of practical work, it is out of the question to measure the test solution by means of an ordinary pipette or to preserve it for any length of time in stoppered vials; the strength of the solution is almost certain to be reduced by contamination with the breath, by contact with rubber or cork.

It must ever be borne in mind that extreme care is necessary in the preparation and use of these very dilute solutions, the strict observance of conditions which might well be neglected in ordinary analytical procedures being here an essential factor of success.

For the preservation and measuring of the test solution the authors have devised an apparatus which appears to answer the above requirements, and in actual practice has been found satisfactory.*

The essential feature of this apparatus consists of an automatic pipette for measuring the test solution. This is a modified form of the pipette first proposed by G. P. Vanier and in use in this laboratory for a number of years. A general idea of it may be had from Fig. 4. The manner of using it is extremely simple. The test solution is preserved in a 1-liter bottle of hard glass provided with a doubly perforated rubber stopper. Through one opening passes the siphon tube of the pipette, which is sufficiently long to reach to the bottom of the bottle; through the other passes a glass tube ending just below the stopper and connected with a small bottle containing fresh soda-lime. By means of the three-way cock the solution is allowed to flow into the small inside pipette until it overflows. The stop-cock is then turned and the solution allowed to flow out at the lowest point. The pipette is made of such a size as to deliver exactly 10 cubic centimeters. The entrance of atmospheric car-

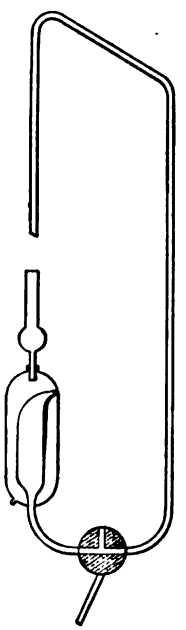

FIG. 4.—Automatic Pipette.

* Air Testing for Engineers. A. G. Woodman and Ellen H. Richards: *Tech. Quar.*, 14, 94 (1901).

bon dioxide as the solution flows out is prevented by the small tube containing soda-lime or bits of caustic potash. The excess of liquid which accumulates in the overflow reservoir may be drawn off when desired. The bottle and pipette are contained in a wooden case about 20 × 8 × 7 inches, outside dimensions, and with the solution weigh about 8 pounds. The case is furnished with a handle at the top so that it may be carried readily in the hand from place to place. The bottle is fastened to the case, and the lower end of the pipette is clamped to a wooden support to keep it from swinging. The stopper should be firmly fastened to prevent loosening.

The bottle should be thoroughly cleaned and washed with potassium bichromate and sulphuric acid, and it is best also to steam it for half an hour or so. As a further measure of precaution the rubber stopper is boiled with dilute caustic potash and thoroughly washed, although the solution can come in contact with it only through splashing while the case is being carried.

This measuring apparatus may be used with a variety of methods and with various strengths of solution.

The general tests are based on two fundamental principles. For instance, the Fitz and Wolpert methods are carried out by shaking a small quantity of dilute lime-water, colored pink by phenolphthalein, with successive portions of air until the solution is decolorized. The greater the amount of carbon dioxide in the air the less will be the volume of air required to neutralize the lime-water, and *vice versa*. That is, the amount of lime-water remaining constant, the amount of carbon dioxide will vary in a certain inverse ratio to the volume of air.

The method of Cohen and Appleyard* is based upon the fact that if a dilute solution of lime-water, slightly colored with phenolphthalein, is brought in contact with a sample of air containing more than enough carbon dioxide to combine with all the lime present, the solution will be gradually decolorized, the length of time required depending upon the amount of carbon dioxide present. That is, the quantity of lime-water and the volume of air remaining the same in each case, the rate of decolorization will vary inversely with the amount of carbon dioxide. The method is scientific in principle because it recognizes the fact that the absorption of carbon dioxide by dilute alkali solutions is a *time*-reaction.

The method of preparation of the solutions and the manner of making the tests which have been found to give the best results will be described in detail, since experience has shown that these directions cannot be too minute.

Preparation of the Test Solution.—The solution used is a dilute solution of lime-water colored with phenolphthalein. To freshly slaked lime add twenty times its weight of water in a bottle of such size that it is not more than two-thirds full. Shake the mixture continuously for 20 minutes, and then allow it to settle over night or until perfectly clear. The resulting solution is the stock lime solution, or "saturated lime-water." If made in the manner indicated, each cubic centimeter of it ought to be very nearly equivalent to 1 milligram of carbon dioxide. If, however, it is desired to know the strength of it more exactly, it may be determined by standard acid.

To prepare the "test solution," pour into the 1-liter bottle of the testing apparatus 1 measured liter of distilled

* *Chem. News*, 70, (*1894*), 111.

water, and add 2.5 c.c. of a solution of phenolphthalein (made by dissolving 0.7 gram of phenolphthalein in 50 c.c. of alcohol and adding an equal volume of water). Stand the bottle on a sheet of white paper and add the "saturated lime-water" drop by drop from a pipette, shaking the bottle thoroughly after each addition until a faint pink color is produced which is permanent for one minute. Now add 6.3 c.c. of the "saturated lime-water," shake, and immediately connect the bottle again to the apparatus.

For accuracy in testing air which is high in carbon dioxide, it is found advantageous to use a solution twice as strong as the above. This double solution is prepared in precisely the same way, using 5.0 c.c. of the phenolphthalein solution and 12.6 c.c. of the "saturated lime-water."

While this procedure does not give an exact volume of solution, it is believed to be the best for the preparation of this dilute test solution, since it obviates the necessity for pouring the prepared solution from the measuring-flask into the bottle in which it is kept; 12.6 c.c. of the stock lime solution is added rather than 10 c.c., in order to keep the values obtained with the resulting solution more nearly comparable with the older values calculated on the supposition that 10 c.c. of "saturated lime-water" was equivalent to 12.6 milligrams of carbon dioxide.

Method of Making the Test.—The Fitz shaker or apparatus for measuring the volume of air used, consists of a tube of about 30 cubic centimeters capacity, closed at one end, and graduated for a distance of 20 cubic centimeters from the closed end. In this tube, by means of a rubber collar, slides a smaller tube which is contracted at the outer end so as to be more readily closed by the finger. The apparatus is shown full size in Fig 5.

See that the inner tube of the shaker slides readily in the outer one, moistening the rubber collar slightly if necessary. Have the inner tube pressed down to the bottom of the larger one, and measure into the apparatus 10 cubic centimeters of the test solution from the automatic pipette, or from a burette, as in Fig. 2. Pull the inner tube up to the 5-c.c. mark (the bottom of the inner tube serving as the index) and close the end of the tube with the finger. Hold the apparatus horizontally, and shake it vigorously for exactly 30 seconds.

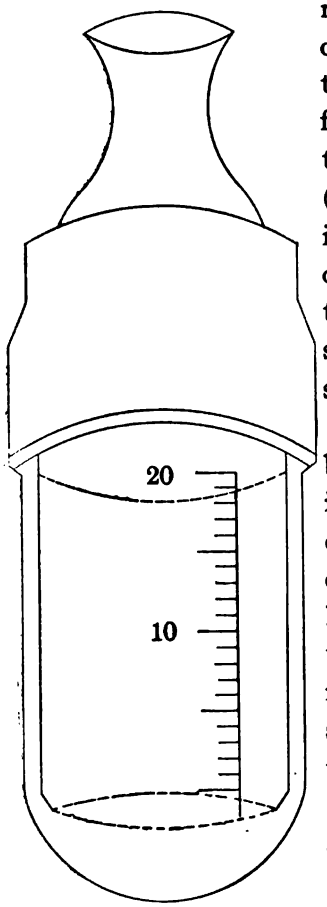

FIG. 5.—Fitz Shaker. Full Size.

The amount of air that is thus brought in contact with the solution is equivalent to approximately 30 cubic centimeters, as there are 25 cubic centimeters of air above the liquid when the small tube is forced to the bottom of the larger. Remove the finger, press down the small tube again to the bottom of the larger and draw it up to the 20-c.c. mark. Shake the apparatus again for 30 seconds. The amount of air brought in contact with the solution is now $30+20=50$ c.c. Repeat the shaking, using 20 c.c. of fresh air each time, until the pink color is discharged. The amount of carbon dioxide corresponding to the number of cubic centimeters of air used will be found in Table A.

Acting on the same principle is the Wolpert shaker shown in Fig. 5*a*. This cylinder is easier to manipulate and results obtained with it by students are more consistent than those obtained with the Fitz.

TABLE A.

Double Solution. CO_2 in 10,000.	Cubic Centimeters of Air.	Standard Test Solution. CO_2 in 10,000.
22.2	50	15.6
18.0	70	12.4
15.1	90	10.2
13.0	110	8.7
11.3	130	7.5
9.9	150	6.6
8.8	170	5.8
8.0	190	5.2
7.3	210	4.8
6.8	230	4.5
6.3	250	4.3
5.9	270	4.1
5.6	290	3.95
5.4	310	3.8
5.1	330	3.7
4.8	350	3.6
4.7	370	
4.5	390	
4.4	410	
4.2	450	
4.0	490	
3.9	530	

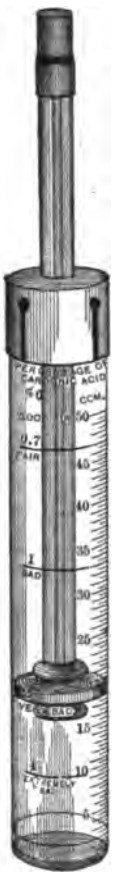

FIG. 5*a*.

The following notes and precautions apply to both forms of the shaker. Care should be taken that the finger used to close the end of the tube is perfectly clean, since on a warm day the free acid in the perspiration might easily vitiate the results. Some may find the use of a rubber stopper preferable.

If greater accuracy is desired, the shaker should be filled with the air to be tested before running in the test solution.

This may be done readily by filling the shaker with water and emptying it.

The apparatus should be shaken vigorously and continuously during the 30 seconds in order to absorb practically all of the carbon dioxide in the enclosed air. The number of shakings ought not to be less than 100 during this time.

Care should be taken not to contaminate the air while the sample is being taken. The breath should be held momentarily while the air in the apparatus is being replaced, and the sample should be collected as far to one side of the body as possible. It ought not to require over 10 seconds to replace the air, and the entire test, with air containing, say, 8 parts of carbon dioxide per 10,000, should not require over 6 minutes.

If less than 90 c.c. of air is required to discharge the pink color, the test should be repeated, using 10 c.c. of air each time after the first 30 c.c.

It is not necessary to rinse out the shaker after making each test, but it should be carefully washed and dried after using, and the parts kept separate when not in use.

The " double solution " is used in exactly the same manner and amount as the regular test solution, reference being made to the appropriate portion of the table.

For the Cohen method the same solutions may be used and measured from the same apparatus. The samples are collected in white, glass-stoppered bottles of one-half liter capacity. This may be done by aspirating the air with a bellows, or the bottles may be completely filled with water, which is then emptied at the place where the air is to be tested.

A convenient modification of this is the water siphon method.— Two bottles (diameter one-third the height) of nearly equal capacity are fitted with rubber stoppers carrying small glass tubing, connected by several feet of rubber connector with

clamps (Fig. 6). One bottle is completely filled with water, nearly free from carbon dioxide.

The pair of bottles is taken to the place from which the air is to be collected. The inlet tube may be long to reach to near

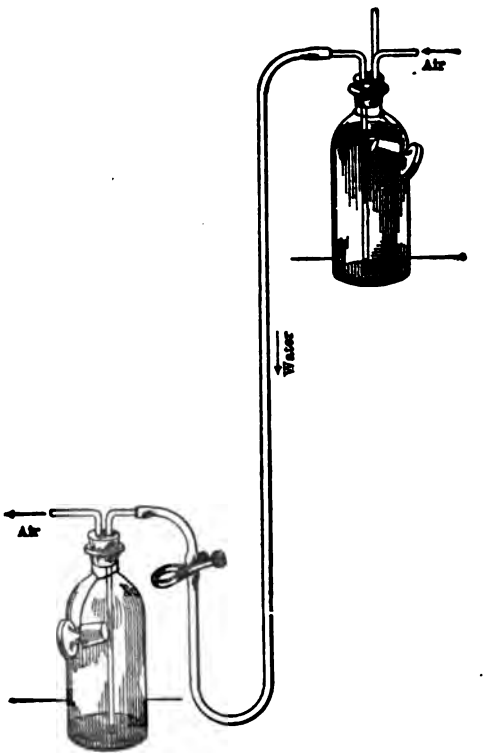

FIG. 6.

the ceiling, or short; if long, the first siphoning should be rejected, to secure filling the inlet tube with the air desired, the stoppers exchanged, and the sample taken. The air-filled bottle is stoppered and taken to the laboratory; or the test solution is at once added, the bottle stoppered and shaken, noting minutes and seconds. One bottle of water with a small

reserve will serve for a number of takings before absorbing a deleterious amount of CO_2. (See Fig. 6.)

A method involving more preparation but less trouble in the field is the *steam vacuum method*. The steam is supplied by a 500 c.c. flask serving as a boiler with a Tirrill burner to

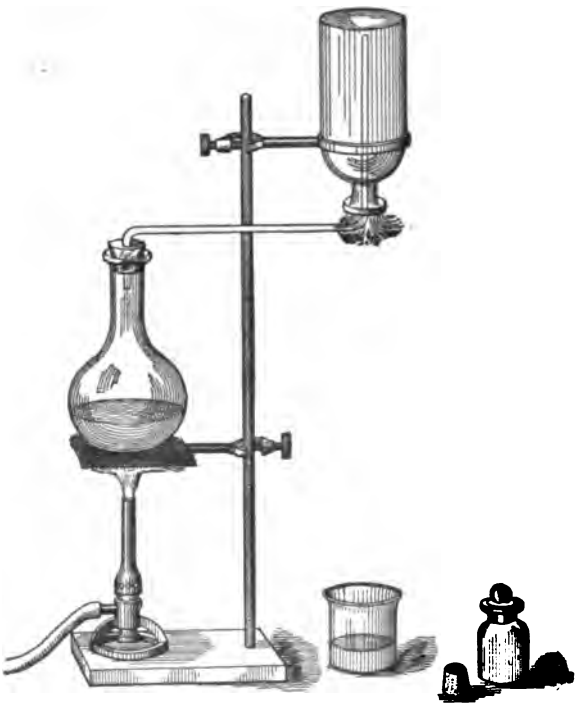

FIG. 7.—Steam-Vacuum Apparatus.
From the thesis of Carl E. Hanson, 1908.

supply the heat. The flask (Fig. 7) is fitted with a rubber stopper carrying a No. 6 glass tube bent so that one end extends within one half-inch of the bottom of the bottle when placed in position on the stand. The bottles used are of about 500 c.c. capacity, made for a ground-glass stopper but fitted with a rubber stopper.

To prepare the jet, the water in the flask is allowed to boil for five minutes in order to expel completely the air in the water and the flask. The pressure should be sufficient to throw the vaporized steam at least one foot above the exposed end of the tube.

The empty bottle is placed on the stand in an inverted position and allowed to remain for three minutes. In the meantime a thin coating of vaseline is applied half way up the sides of the stopper. The vaseline acts as an unguent, reducing the coefficient of friction to such an extent that the principal resistance is due to the reaction of the stopper against compression. This enables one to force the stopper in far enough to bring the glass and rubber into intimate contact, which is essential. The vaseline also fills the interstices between the rubber and the glass, which makes leakage impossible.

Protecting the hand with a cloth, the bottle is raised from the stand, and the instant it clears the end of the tube the stopper is inserted while the bottle is still inverted. The stopper may be pushed in more securely by pushing it against the table with a few pounds pressure while the bottle is still in the inverted position. The stopper is kept in under this pressure for a few minutes until the vacuum begins to form, after which the atmospheric pressure will keep it in place.

All the bottles required are treated in the same way. The rubber stoppers should be at least one size larger than would ordinarily be used for the bottles, and should project three-eighths of an inch or more to be easily removed when the sample is to be taken.

Sample bottles may be tested for completeness of vacuum by holding them in an inverted position under water at 70° F., free from carbon dioxide, and removing the stopper. After the water has replaced the vacuum, the stopper is inserted and the bottle removed.

In making the test 10 c.c. of the test solution are run in from the automatic pipette, or from a burette as in Fig. 2, the time noted, and the bottle shaken continuously and vigorously with both hands until the pink color vanishes. From the time required the amount of carbon dioxide in the air may be found by referring to Table B.

TABLE B.

Double Solution. CO_2 in 10,000.	Time, Minutes and Seconds.	"Test Solution." CO_2 in 10,000.	Double Solution. CO_2 in 10,000.	Time. Minutes and Seconds.
....	0.15	....	4.0	5.45
....	0.30	15.6	...	6.00
....	0.45	12.1	3.9	6.15
16.0	1.00	9.9	...	6.30
13.1	1.15	8.4	3.8	6.45
11.4	1.30	7.2	...	7.00
10.1	1.45	6.3	...	7.15
9.1	2.00	5.5	3.7	7.30
8.3	2.15	4.9		
7.6	2.30	4.4		
7.0	2.45	4.0		
6.5	3.00	3.8		
6.1	3.15	3.7		
5.7	3.30	3.6		
5.4	3.45			
5.1	4.00			
4.9	4.15			
4.7	4.30			
4.5	4.45			
4.3	5.00			
4.2	5.15			
4.1	5.30			

Carbon Monoxide.—The detection and estimation of carbon monoxide in the very minute quantities in which it is found in the air of ordinary rooms is a problem of considerable difficulty.

Detection.—Probably the most convenient test for detecting small quantities is the blood test. Dilute a large drop of human blood, freshly drawn by pricking the finger, to 10 c.c. with water. Divide the solution into two equal portions, and shake one portion gently for ten minutes in a bottle containing about 100 c.c. of the air to be tested. Compare the tints of the two portions by holding them against a well-

lighted white surface. The presence of carbon monoxide is indicated by the appearance of a pink tint in the blood which has been shaken with air. One part in 10,000 can be detected in this way.* The delicacy of the test can be increased by examining the blood, after shaking with the air, with a spectroscope. By collecting the sample in an 8-liter bottle and examining it in this way 0.01 part in 10,000 may be detected.

Determination.† — *Principle.* — Oxidation of the carbon monoxide to carbon dioxide by iodine pentoxide, iodine being liberated according to the following equation:

$$I_2O_5 + 5CO = I_2 + 5CO_2.$$

The iodine is titrated with $\frac{N}{1000}$ sodium thiosulphate.

Directions.—Place 25 grams of iodine pentoxide, free from iodine, in a small U tube which is suspended in an oil-bath and connected with a small absorption-bulb containing 0.5 gram of potassium iodide dissolved in 5 c.c. of water. Heat the oil-bath to 150° C., and pass the air, previously drawn through U tubes,—one containing sulphuric acid and the other solid potassium hydroxide,—through the apparatus at the rate of a liter in two hours. Titrate the liberated iodine by $\frac{N}{1000}$ sodium thiosulphate and starch.

Notes.—The temperature and barometric pressure should be noted and all volumes reduced to 0° C. and 760 mm. pressure.

Using 1000 c.c. of air, it is possible to determine in this way 0.25 part per 10,000, by volume, of carbon monoxide.

The use of tubes containing sulphuric acid and potassium hydroxide is to free the air from unsaturated hydrocarbons, hydrogen sulphide, sulphur dioxide, and similar reducing gases.

* Clowes: "Detection and Estimation of Inflammable Gas and Vapor in the Air," p. 138.

† Kinnicutt and Sanford: *Jour. Am. Chem. Soc.*, 22 (1900), 14

Nitrites.—The determination of the amount of nitrites or nitrous acid in the air can be readily made as follows: Collect a sample of the air in a calibrated eight-liter bottle, as in the determination of carbon dioxide. Add 100 c.c. of approximately $\frac{N}{50}$ sodium hydroxide solution. (This should be free from nitrites and is best made by dissolving metallic sodium in redistilled water.) Shake the bottle occasionally and let it stand for about twenty-four hours. Take out 50 c.c. of the solution and determine the amount of nitrites as directed on page 108.

Micro-organisms.—For the quantitative determination of the number and distribution of the micro-organisms in air, the method employed by Tucker * in the examination of the air of the Boston City Hospital answers very well. The apparatus used consists essentially of three parts: (1) a special glass tube called the *aerobioscope*, in which is placed the filtering material; (2) a stout copper cylinder of about sixteen liters capacity, fitted with a vacuum-gauge; (3) an air-pump. The filtering medium which is used to retain the micro-organisms is a narrow column of sterilized granulated sugar about four inches long.

In using the apparatus, the required amount of air is first drawn from the cylinder by means of the air-pump. A sterilized *aerobioscope* is then attached to the cylinder and the air is slowly drawn through it, leaving its germs in the sugar-filter. After the air has been drawn through, the *aerobioscope* is taken to the culture-room and the sugar dissolved in melted sterilized nutrient gelatine. The gelatine is congealed in an even film on the inside of the tube, where, after

* Report State Board of Health, Mass., 1889, 161.

four or five days, the colonies will develop, and can be counted by the aid of squares engraved upon the glass.

This method possesses several peculiar advantages. The use of a vacuous cylinder allows a known volume of air to be readily aspirated, and the rate of flow through the filter is easily controlled. Another great advantage is the use of a soluble filter (sterilized granulated sugar), since insoluble substances seriously interfere with the counting. Furthermore, the removal or transference of the filter and its germs is avoided. The apparatus is portable, and the method, as compared with others, is exceedingly rapid of execution.

Organic Matter.—In regard to the presence of organic matter in the air there is at present considerable variance of opinion. While some investigators have obtained results which indicate the presence of such organic matter, it has been found also that the amount which is obtained is very much less when the dust of the air is first removed by filtration. The quantity of organic matter is therefore closely related to the amount of dust, and there is strong evidence that this dust in the air is the source of the greater part, if not all, of the organic matter, unless there are present persons with decayed teeth, diseased lungs, etc.

The methods of determination that are in general use may be divided into two groups. In the first group are those methods in which the organic matter is converted into ammonia and determined by Nessler's reagent. In the second group the organic matter is oxidized by boiling with dilute potassium permanganate, the excess being titrated with oxalic acid. No one method gives results which are wholly satisfactory, the chief difficulties being to secure an absorbing material which shall itself be free from organic matter, and to avoid the introduction of minute particles of organic matter or dust during the analytical process.

Remsen * and Bergey † recommend the use of freshly ignited granular pumice-stone contained in a narrow glass absorption-tube. After aspirating a known volume of air, the pumice-stone is transferred to a flask, the ammonia distilled off from alkaline permanganate and estimated by Nessler's reagent. Experience with the method in this laboratory has shown that it is practically impossible to prepare the pumice-stone so that it shall be absolutely free from organic matter, and that the mere act of transference of the absorbing material resulted in a considerable error. Miss Talbot ‡ found, furthermore, that all of the organic matter is not converted into ammonia by a single distillation, but that a second and third redistillation of the distillates uniformly gave higher results. She found it preferable to draw the air directly through the boiling permanganate, having the apparatus so arranged that the condensed steam was returned to the flask. In this way the particles of organic matter were returned again and again to be acted upon by the permanganate.

Experience with all these methods is well summed up by Professor Remsen when he says: "It would be useless to have examinations of air made by any but the most careful workers. It would be time thrown away to have such analyses made by the average practical chemist."

Dust and Soot.—The dust in the air may be estimated by drawing a measured volume through tubes packed with cotton and noting the increase in weight. Soot may be determined by drawing the air through combustion-tubing partly filled with ignited asbestos, and then determining the carbon by the ordinary methods of combustion.

* National Bd. Health Bulletin, I, 233; II, 517.

† Mis. Coll. of Smithsonian Institution, No. 1037 (*1896*).

‡ *Tech. Quart.*, 1 (*1887*), 29.

CHAPTER V.

WATER: ITS SOURCE, PROPERTIES, AND RELATION TO LIFE AND HEALTH.

(From the Householder's Standpoint.)

THE metabolism which produces human energy is dependent upon the presence of water in the tissues. This water is derived in part from food which, as eaten, contains from 30 to 95 per cent.; in part from boiled water, as in tea and coffee; or raw from well or city tap. The total daily supply per person for this purpose from all sources is five or six pints.

Water is also necessary to all forms of vegetable and animal life, even the lowest types, including those inimical to human health. Man has always used water as his beast of burden: to carry ships to the ocean, to turn mill-wheels, to generate electrical power. He has also forced it to be his scavenger, carrying the refuse of his activities out of his sight. Unless compelled by legal restrictions, he has given little thought to the effect on his neighbor of this treatment of their common property.

In common law, water is held to be a gift of nature to man for use by all, and therefore not to be diverted from its natural channels for the pleasure or profit of any one to the exclusion of the rest. Neither has one the right to return to the channel water unfit for the use of his neighbor farther down the stream. That is, there is no private ownership in

surface-waters flowing in natural channels. But this interpretation of eminent jurists has not always been strictly followed. Many cases have been decided, especially since the rapid growth of large cities, in direct contradiction to this law. As population increases, cities need to go farther and farther into the country for their water-supply, and they often take from the few settlers found there the right to the water which passes their doors, for the benefit of far-away thousands.

The law in regard to that portion which never enters, or which escapes from visible channels, is less clear. It is usually held that this water goes with the soil, and that rights to it may be bought and sold: that wells may be driven and drains dug, even if a neighbor's supply is cut off; but it is always maintained that no man has a right to place any substances on or in the ground which shall render his neighbor's well unfit for use.

The changes in conditions of life have rendered imperative a careful study of the ways and means of practically complying with the law's demand without a serious restraint upon the progress of civilization.

The daily quantity required for each person has increased from the two to four gallons drawn by bucket from the farmhouse well to thirty or forty gallons taken from the town supply by the turning of a faucet, and in cities where much is used for manufacturing purposes, for running elevators and motors, the daily amount may reach 100 gallons per inhabitant. This constantly increasing use of water for other than cleansing purposes has enormously increased the difficulty of securing clean water for domestic use. Not only is a larger quantity of polluting material deposited in the water, but it is carried farther from its source by the dilution. This fact, as well as the demand for higher standards of

purity, has made the abandonment of private water-supplies a necessity, and has demanded from municipalities the best scientific knowledge and the most careful supervision of the quality of the public supply.

A city or town is under as strict obligation to furnish a safe supply of water as it is to provide safe roads. To this end, the proper construction and maintenance of reservoirs and a sufficient police surveillance of the watershed is as important as abundance of supply.

Education of the people at large is still necessary, not only that those who depend in whole or in part upon springs and wells may know how to protect themselves, but also that the necessary cost of the larger public (municipal) supply may be cheerfully paid for by the citizens.

Leaving out of the present discussion such considerations as belong only to the engineer and specialist, the problem of potable water will be treated in this chapter from the point of view of the intelligent citizen and educated individual who cannot afford to remain ignorant of so important a factor in the general welfare. The reason why this education is needed lies in the fact that primitive habits of thought, influencing action in every-day life, survive long after the race has passed beyond the original conditions. In no respect is this more true than in regard to water.

The ideal drinking-water of most persons is the clear, colorless, sparkling water of a spring, refreshing in its coolness and satisfying the æsthetic sense by its suggestion of purity. So strong a hold has this ideal that it is most difficult to convince the average person that any water which has these characteristics can be other than wholesome and, conversely, that water lacking in any of these qualities is suitable for human consumption. Early man drank clear cool water

wherever he found it. If there was not a spring at hand, he scooped out a hole in the sand. Pioneer settlers dug the well as near the kitchen door or the barnyard as they could find water, with a blind faith in the protecting power of mother earth, not wholly misplaced so long as the requirements of the household did not exceed two or three gallons per person daily, and so long as the nearest neighbor was half a mile away. So persistent is this confidence in nature that in the light of this day a majority of intelligent people, even, will quaff at a roadside well or drink freely at a country hotel or go to live in a city without ever taking thought for the quality of the water. Water is water, and he who pauses with his glass half-way and asks whence comes the supply is scouted as a weak-minded crank. So, too, when town authorities have spared no pains or expense to secure a safe supply from a distant lake, and have guarded it by all means known to science, the primitive habit of thought requiring colorless water of an even coolness of temperature leads those who can afford it to purchase "spring"-water in jugs and bottles, with the blind faith of the savage that what comes out of the ground must be good.

Fundamental race-habits are taken advantage of by the dealer in spring-waters as well as by the vendor of patent medicines—the missionary has no chance against him. From the schools and colleges there should, however, be sent out a generation of more intelligent persons who, learning to weigh evidence, will not take chances and will help to develop a public opinion on sanitary matters, especially in regard to water-supplies. For not until there is an intelligent public can the present reckless use of water and ground be stopped. While not every man may be a chemist, he can have that modicum of knowledge which will enable him to understand the need of chemical tests of

water and to distinguish between the work of the expert and the amateur.

However safe this ideal of clear, colorless water may have been in early times, it must now be relegated, with the unbarred door and unwatched treasure, to the mountain fastnesses. As the country becomes settled, appearance and taste are no longer sufficient guides; therefore scientific tests must be applied and the results interpreted by trained observers to whom the individual subordinates his private judgment.

The ideal water should be above suspicion, for if it has once been contaminated, who can tell how soon it will find bad company again? Not the analyst in his laboratory. In fact, the laboratory verdict is worth very little without a knowledge of outside conditions and without a keen detective insight which scents out the most unlikely causes. Nevertheless the evidence given by analytical results is needed to procure conviction.

Although "pure" water is found only in the laboratory, "safe" water, that which is reasonably free from objectionable substances, mineral and organic, may be obtained with sufficient care and knowledge.

A clear understanding of the problem requires a close study of the circulation of water on the earth. Let us trace the course of water from sky to ocean, in view of its availability for domestic use, and note the dangerous properties it may acquire, considering also the changes in condition which it may undergo in its course from mountain to sea.

Water-vapor rising from sea and land is condensed in the upper air, then falls to the earth, absorbing, as it does so, ammonia, carbon dioxide, sulphur oxides, and other soluble gases, if present, and washing the air free from dust-particles, mineral and organic.

This meteoric water (rain or snow), although nearly free from dissolved mineral substances, is therefore by no means pure. Furthermore, rain falling on insoluble rocks, bare or lichen-covered, or on loose, sandy soils, washes them also, giving up to the vegetation the ammonia and taking in return carbon dioxide and dissolved albuminoid ammonia.

Water thus enriched has increased solvent power on certain rocks and soils. This rain-water soon forms rivulets which, passing down from the highlands into the forest, spread over the moss-covered area, soaking the leaves and peaty soil and extracting organic substances. Mountain brooks, as well as lowland streams, draining a region free from limestone, are thus colored brownish-yellow and furnish "meadow-tea," as Thoreau happily named it. As the stream flows on it receives contributions of many kinds—the overflow of springs, the under-drainage from cultivated fields, the surface-wash from pasture and meadow. Scavengers are, however, constantly at work. Brought as dust by the ever-passing air-currents, seeds of tiny plants freely sprout in the water and grow rapidly whenever a quiet pool or lake gives opportunity. The products of organic decay and the ammonia of the rain may be thus removed and the water pass on to the reservoir clear and soft and as nearly pure as nature furnishes. It is, however, becoming rare to find even a mountain stream or forest brook which has not been subjected to modification by human agencies. Three kinds of contamination may take place. First: A farmhouse high up on the hillside lays tribute for drinking purposes upon that water finding its way beneath the sand which appears in the form of a spring. The overflow is made into a duck-pond, or passes through the watering-trough by the roadside before it joins other water tumbling over the rocks as a rapid stream. The brook thus grown larger widens out a little below the farmhouse into a

shallow pool, in which one or two cows frequently seek comfort. The water has become rich in organic matter and supports a thick growth of tiny plants; the stones, even, may be coated with green slime. This vegetation serves as a warning to the hunter and the woodsman, who wisely drink only of water from clear pools with bottom of shining sand. The heavy material stirred up by the cattle soon settles, leaving the water in the stream below clear, although probably a little yellow in color. It still tastes well and looks all right, and may be used by human beings with probable impunity.

Second: The little stream next passes other farm buildings, where the privy is put over it to save the trouble of cleaning, or, even if not so close, is placed in such a way as to allow of a possible wash into it, especially in times of sudden rain.

A case of typhoid fever develops at this farm. No precaution is taken to disinfect the discharges, and a portion of the dangerous material is carried into and along with the water. Some two or three miles below, another farmhouse, having no spring, uses this same little stream for its supply, perhaps damming it up into a little pond or pumping it into a tank. All unconscious of what has happened above, or ignorant of consequences, this water with a history is freely used, and perhaps the whole family come down with the disease, perhaps only the delicate one may have it. It may be that they will all escape, owing to the fact that they were particularly robust, or that they drank no water raw, or that the conditions on the stream have been favorable to purification of the water by storage and consequent growth of the green plants, which are our friends in such cases; but if the water were pumped into a covered tank and used soon after, the chances are nine to one that some deleterious results followed.

Third: A part of the water sinks through the sand, and by this filtration becomes freed from all suspended matter and consequently from the germs of disease, if present. In its course if it is intercepted and collected in a shallow well it may again be of great organic purity and free from danger, but it will surely bear the telltale marks of its progress in the increase of chlorine and solids which will have escaped all the agents of purification, and in the nitrates, the result of the process.

It will be noticed that it is only after contamination with the "*waste of human life*" that danger comes to other human beings and that many circumstances modify that danger. The chances are about equal to those of fire; and as most householders think it worth while to insure against possible fire, so they should hold the chemist's certificate as a sort of water insurance; but since the fire policy does not protect from carelessness, the knowledge that the water-supply is once good does not absolve the householder or the citizen from the greatest care in protecting his premises. Duty to his neighbor should lead him to see that this coin of the world is passed on in as good condition as possible, and he should at least give notice of danger when he knows that it exists.

But this general movement of water on and near the surface is not all the story. From 25 to 40 per cent. of the annual rainfall, in temperate regions, soaks at once into the ground, and passing downward through the soil to hard-pan, to clayey or impervious layers, or to rock surface, thence through crevices, broken joints, or glacial drift-deposits to the water-table, flows along the slope for many miles, until it finds its way again to the surface, either from the bottom of a lake, the bed of a river, the side of a hill, supplying wells or appearing as a spring free from all organic and suspended

matter but often rich in gases. In any one of these courses it may be intercepted by man and caught or pumped for his use. Such water may never have been far from the surface; it may have been used and returned to the ground many times; it may have appeared as surface-water and again disappeared to great depths. It has been estimated that water moves in the ground at rates varying from 0.2 to 20 feet per day. This long contact with rocks will, of course, bring mineral substances into solution which may be precipitated as new rocks are reached or other streams encountered, so that the same gallon of water may have had many stages in its course and may have held many different substances in solution. An example of how much can be so held is found in the waters of the alkali belt (page 241).

It is no wonder that so active a solvent as water should take with it much substance whenever it remains long in contact with soil or rock, for it may be many months before that which has once sunk out of sight again appears. In fact, great rivers are supposed to flow into the sea from under the surface. Stone age stuff.

Then, too, the acquisition of dissolved gases favors the solution of many substances; for instance, water carrying carbon dioxide dissolves limestone as well as lead and copper, and when at low temperature and containing ammonium carbonate water may dissolve ferric iron.

Water carrying organic acids dissolves among other substances iron compounds which may or may not be in the ferrous condition, and therefore may or may not be precipitated on coming to the surface. And as we have seen that the ground below a certain level is permeated with moving water, whatever is buried in the earth is likewise liable to enter the watercourses in one form or another.

An understanding of this movement of water under-

ground, with the accompanying changes in its character, cannot be too strongly insisted upon, for the lack of comprehension of it is at the root of most of the troubles from well-waters. For example, the leaching cesspool, the primitive " septic tank," delivers its more or less filtered water rich in nitrogen compounds into the general circulation at a depth below the most efficient action of the nitrifying organisms, hence it may permit the passage of organisms of putrefaction into underground streams or into the well, when access is direct. Even when filtration is perfect, the products of decay are yet carried with it and so tell the story of the past. The difficulty is to determine the state of the filter which may be on a neighbor's land many hundred feet away, and to be sure that its action is uniform. Experience with artificial filters shows how difficult it is to maintain efficiency with rapid use; hence heavy rains or wet years may cause a state of danger not ordinarily existing.

The relation of water to human health must be considered chiefly in the light of the changes which go on in the substances held suspended or dissolved in it, and the effect of these changes on the wholesomeness of the water. The suspended matter may be either inert, as clay or sand; dead vegetable, as fragments of plants; living vegetable, as plants floating on the surface, diatoms, desmids, algæ, etc.; dead or living animal, as infusoria, small crustaceans, etc.

Wherever these occur there are found the lower orders of vegetable organisms, fungi, moulds, bacteria, ready to do the necessary work of decomposition preparatory to solution. The mere presence of these forms of living matter does not of itself mean danger to those using the water, but among these may be found pathogenic organisms which are, at present, considered as liable to cause disease. Such microbes do not find in water a congenial habitat, and, fortu-

nately, do not thrive on the vegetable diet and in the cool temperature of natural waters, hence the other organisms soon overpower them; danger decreases not only in proportion to distance, time, and dilution, but also, probably, to the abundance of other vegetable life. Under favorable circumstances the danger is, however, a very real one.

The presence of certain living plants may, moreover, give rise to unpleasant, if not dangerous, tastes and odors, due to the presence of extremely pungent oils or other aromatic substances formed in the process of growth. When these plants are decaying putrefactive odors are also present, sometimes rendering the water too offensive for use. These organisms are described in Whipple's "Microscopy of Drinking-water," and in Chapter VII a short list of those which give characteristic odors will be found.

The presence of much decaying vegetable matter in drinking-water is to be avoided, since it is not known what effect it may have upon the general health of the individual, rendering him perhaps more susceptible to disease.

Food-supply is a necessary condition for life, and there cannot be abundant growth in a water without a correspondingly large amount of dissolved substances furnishing the food for this living fauna and flora. As has been stated, water usually carries considerable mineral substance and is often supplied with organic and gaseous compounds, while nitrogen is furnished from many sources, most abundantly from sewage, so that it is not strange that water-life is so abundant, but rather that it is not more so. Most of the difficulties in securing a satisfactory water-supply are connected with the cycle of nitrogen in its relation to organic life.

This may be briefly stated as follows: Nitrogen is found as an essential constituent of all living matter. When thus combined, it is the so-called organic nitrogen, and is found

in undecomposed vegetable or animal substances. As soon as dead, these substances may become food for micro-organisms and the nitrogen then appears in a form from which it can be obtained as ammonia; for instance, from decaying beans, from putrefying broth, and from fresh sewage. This process takes place with or without much air and may be accompanied by very bad odors. As soon, however, as the nitrogen has passed from the insoluble organic form into the soluble compounds from which ammonia is obtained, then, if oxygen is present, and only then, another set of micro-organisms take up the work and nitrites appear; when still another set have done their work the nitrogen is found only in combination as nitrates, fully oxidized and mineralized, no longer organic or capable of sustaining the life of the lower forms of vegetation, but, on the other hand, the most valuable food for chlorophyll-bearing plants which convert nitrates again into organic nitrogen. This cycle may be arrested or broken at certain stages. If the soluble ammonia compounds are set free out of contact with air or below the layers of soil containing the nitrifying organisms, they may remain indefinitely unchanged. If nitrates have been carried below the reach of the roots of the chlorophyll-bearing plants, or if they are confined in a space deficient in oxygen, then an access of decomposable organic matter with micro-organisms will cause a reduction of the nitrates to nitrites and free nitrogen, through the action of these lower plants which, in the absence of air, take the little oxygen they need from mineral compounds.

These micro-organisms are not the only ones at work, however. In any sudden prominence of one factor others are apt to be overlooked; thus in the present case the infinitely small has so powerfully affected men's minds that, partly because the micro-organisms are beyond their range

of vision, such forms of life as are evident to the naked eye or with low powers of the microscope have been overlooked to an extent.

As agents of putrefaction and of decay the micro-organisms have their work to do, but the final purification—the finishing up of the work—belongs to another order of life. The still minute but visible green plants—those which float free in water or attach themselves to larger growths—have now their part to play. The life-history of these forms has been little studied, and the work they do in the actual purifying of polluted water has been almost overlooked. The impression left on reading most books is that when foul matter has been dissolved and converted into ammonia, carbon dioxide, and nitrates the work is done, but these compounds only furnish food for the next class, and these again for infusoria, tiny crustaceans, etc.

In some cases these organisms succeed each other with great rapidity; in one case the fauna and flora of a given pond varied each week of a season, certain rare forms being found only once.

There is needed, almost more than anything else, a consecutive study of the green plants found in water-supplies, since by their cultivation greater purity might be attained and possibly a way might be found of exterminating the disagreeable ones. The most unexpected results may follow the long study of a single organism, such as has been given to *Oscillaria prolifica* of Jamaica Pond for a period of fifteen years. Weekly, sometimes daily, observations have been made for several years.*

It is organisms of this class which give tastes and odors to water, and which, if enough were known concerning them,

* *Trans. A. A. A. S.*, 1898. *Technology Quarterly*, 14 (*1901*), 302; 15 (*1902*), 308.

would probably give perfectly trustworthy evidence as to the past history or source of contamination.

The two classes of organisms work in opposite directions, and so long as food is present for either, life will increase with proportional rapidity. This connection of cause and effect should be made familiar to the intelligent citizen. When a ground-water free from all organic matter but rich in nitrates is exposed in an open basin the rich growth of chlorophyll-bearing algæ follows as a matter of course; later, decay sets in and products of decomposition abound, the air above being the source of a constant supply of spores of all kinds.

When a house- or barn-drain empties into a small sluggish stream, it soon becomes filled with green plants thriving on the ammonia, and it is often possible to trace the source of pollution of a large lake by the line of green anabæna leading to the insignificant ditch.

A curious blindness on the part of managers of waterworks to the movements of water and its action in transporting material is seen not only in the almost universal proximity of cemeteries to reservoirs, but also in the common practice of dressing the sloping banks of turf with a heavy coating of manure. Even if this was derived from clean stables and was not liable to be contaminated with night-soil, the abundant food for plants which inevitably finds its way into the reservoir occasions as fruitful results in the water as on the banks, and is undoubtedly the cause of much of the trouble in storage basins.

It is evident, therefore, that a once polluted water cannot be said to be purified so long as food for green plants remains, for the moment the temperature and other conditions become favorable growth will begin. The term "purification," taken in a chemical sense, should not be loosely used.

Complete purification can take place only when all traces of former impurity, in any form, have been removed. Chemical precipitation of sewage leaves the soluble ammonia, and sand filtration leaves nitrates to serve for abundant life and subsequent decay in the streams into which the effluents flow. Such effluents are *clarified* and the organic matter may have been mineralized, but this is not *purified* water. Only when growing plants have removed this food and have themselves been removed can the water approach a purified condition.

The effect of storage of water containing high nitrates in open tanks or reservoirs exposed to the collection of dust will be that spores of chlorophyll-bearing algæ, diatoms, desmids, etc., will soon develop and will increase as long as the food (nitrates, mineral matter, etc.) lasts. Only by protection from dust and light can such water be kept free from unpleasant accumulations of suspended organisms or from disagreeable tastes. Unpolluted surface-waters, on the other hand, improve on storage, as a general rule, if the basin is a clean one. The storage of polluted or clarified water is thus forbidden, since not infrequently the first indication of the pollution of a surface supply is given by the appearance of some member of that richly nitrogenous group of algæ called *cyanophyceæ*, or "*blue-greens*," from the presence of blue or purple coloring matter along with the yellow-green chlorophyll. Since this group of plants contains from seven to eleven per cent. of nitrogen, while other groups contain only one or two, it is evident that, if it is to flourish, more nitrogenous food must be supplied. This may be derived from fertilized fields, from decay of other vegetable life, as well as from the richer source of direct sewage; but, in any case, the growth of these plants is a sign of abundant food-supply which must be cut off if they are to be starved out, as they must be unless they are removed while fresh by strain-

ing or skimming, for the odor of their decay is so intolerable as to preclude the use of the water. In some cases the odor accompanying their growth renders the water quite objectionable, and neither natural nor artificial filtration is able to remove it.

Either natural or artificial basins may have a collection of vegetable matter on the bottom which slowly decomposes in summer, and since the bottom water is colder, the resulting ammonia remains until the late fall overturn, when it is brought to the surface, where it favors the growth of diatoms and other cold-water plants. Certain diatoms, as asterionella, cause disagreeable odors. Such basins show the least ammonia in early October and the most in late November.

In order to make any predictions as to the probable development of this flora and fauna of water, experience and at least a year's watching of any given supply are required until more is known of the life-history of these forms of life. Nothing is more needed to-day than work along these lines. When may disagreeable odors and tastes be expected? What precaution or measures may be taken in each case to prevent them? These are the questions the water-works superintendent, equally with the consumer, is asking, for the most part vainly as yet.

As has been stated, surface-waters often carry stable organic matter in connection with color, so that while the organic nitrogen shows high, no free ammonia or nitrates are formed on standing. These weak meadow-teas are now largely used for town supplies, and a word as to the source of the color may not be amiss. Many carbonaceous substances, sugar, for example, when partially broken up become caramelized and give a brown solution, the color being due to substances richer in carbon; this color is deeper as the decomposition is more complete. There is no reason to sup-

pose that such compounds have any deleterious effect on health. Indeed, experience has proved that such waters are more reliable than many others.

The chlorine of unpolluted natural waters is derived from the sea in past or present times. Waves breaking on a rocky shore send finely divided salt-spray high into the air; dust-particles becoming coated with it carry their burden of salt around the world. The rain brings to earth now more, now less of this salted dust, each region receiving in the course of the year an amount fairly proportional to its distance from the seacoast and to the rainfall. No mountain lake or stream has yet been found free from this element. Where evaporation and rainfall nearly balance, the normal chlorine will be that of the rain for the year, but where evaporation is in excess it may exceed that for any given year. In the absence of salt-springs and industries using much salt, the source of chlorine in excess of the normal is the domestic life of man. Mr. F. P. Stearns has estimated that the chlorine in the annual drainage of any watershed is increased one-tenth part per million by 20 inhabitants per square mile.

Chlorine may serve to prove not only the presence but the amount of sewage pollution in any case where the other factors are known. Otherwise chlorine has no sanitary significance.

Of the mineral constituents in waters there is little to say except that, like climate, water is to be taken as it is found—hard, high in mineral matters if derived from a limestone region, soft if from archean formations. Physicians are not agreed as to the effects of hard water, or of the brown soft waters.

Fortunately the human system possesses remarkable adaptability, so that if slowly accustomed to a given condition, as we have seen in the case of air, and as we shall have

occasion to remark when food is considered, it can safely bear what would be a serious shock if suddenly encountered from an opposite condition. Natives of a hard-water region are made ill on coming to a soft-water region, and *vice versa.* Inhabitants of a city with a polluted water-supply seem to acquire a certain immunity.

The safety from organic contamination secured by the use of distilled water has brought up the question of a possible danger in too little mineral contents for the best cellular interchange wherein lies life.

With the superabundance of mineral salts in ordinary diet, there would seem to be little cause for alarm; but if the food were poor in these substances, it is quite conceivable that evil results might follow a free use of distilled water.

A word as to the care of water in the house may not seem amiss, in view of the tendency it has to absorb gases, to collect dust, to favor chemical and vital changes, to dissolve metals.

Too great care cannot be taken in all these directions to secure water freshly drawn from the main pipe beyond the lead or brass house-pipes and to avoid those traps for the unwary householders—faucet filters.

When the water-supply is safe, but warm and flat to the taste, ice is frequently used to cool it.

Much has been said about the dangers of ice when used in drinking-water and on or about food. The latter is probably the most serious danger, since people are not so careful about the quality of ice for that purpose.

Certain rules may be broadly stated as guides to the householder:

Crystal-clear ice, free from crevices, bubbles, etc., is probably pure, for it has been formed from slow freezing in a thin layer, over a deep mass of water, as 20 to 30 inches of

ice in a pond 40 or 60 feet deep. In this case the impurities have been excluded. This crystal ice is impermeable to air and therefore to what air carries, and of course to water and what it carries.

An equally safe rule is to discard all "snow-ice" made from snow saturated with water.

The increasing difficulty of obtaining safe water has caused an increasing use of distilled water obtained either from domestic stills or in bottles or carboys from manufacturers. The latter is often a desirable source of drinking-water if the glass does not scale off from the bottles. A very little common salt may be added if the consumer prefers, or even a drop or two of the druggists' "lime-water."

The domestic still, if made from a poor quality of metal, may bring an evil second only to that of polluted water. Lead should not enter into its construction.

CHAPTER VI.

THE PROBLEM OF SAFE AND ACCEPTABLE WATER AND THE INTERPRETATION OF ANALYSES.

(From the Chemist's Standpoint.)

FROM what has been said it will be evident that the problem of safe water for domestic use is not so much concerned with the water itself as with its property as a carrier and its part in chemical changes.

We have seen how a great variety of vegetable and animal matter finds its way into the water of a settled region; and as it is constantly being transformed from one form to another by the agency of multitudes of organisms, it is evident that the exigencies of modern life render impossible the exclusive use of water of great organic purity. It is useless, therefore, to fight over again the battles of the past as to the source and kind of "organic matter" in water.

We have also seen that it is not the mere presence of compounds of carbon, hydrogen, and nitrogen in drinking-water which gives the element of danger. It is not even the fact that these have taken part in animal life; fish and frogs continually die in ponds and streams, to say nothing of countless cyclops and mosquito larvæ. Well authenticated cases are on record in which one drink of a polluted water has proved fatal; while, on the other hand, it is equally sure that highly contaminated water has been used with apparent impunity.

When water has received excreta of diseased human beings, disease-germs are very likely to be conveyed by it to other human beings. In a city there are always cases of disease, therefore all city sewage is to be considered dangerous. But besides the living germs there are other accompaniments of decaying organic matter which, when in concentrated form, sometimes show toxic properties. Certain facts and many conjectures lead to the conclusion that a water is "safe" only when free from *decaying* substances.

Along with the millions of harmless micro-organisms engaged in the work of conversion there may be a few score inimical to the health of man, and for the education of the still skeptical public it is often advisable to speak somewhat strongly of the possible dangers from water-borne disease-germs.

Nitrogen as the Essential Element in Living Matter.—All organisms from the lowest to the highest thrive only in the presence of food; therefore only that organic matter which serves to support life or which, as a product of life, may be deleterious to man is rightly to be held as dangerous. The element common to both kinds is nitrogen; therefore the water-analyst seeks evidence not only of its presence or absence, but of the forms in which it is found and their relation to one another. It may be assumed that any water which shows no change in the relative amount of its nitrogenous compounds at the end of a week either does not contain the organisms necessary to effect this change or is wanting in the food upon which they can thrive. As, however, it is inconvenient to wait a week before deciding this point, other methods are used. The so-called albuminoid ammonia is supposed to indicate the amount of decomposable nitrogenous matter, but, as a matter of fact, taken by itself it gives little information of value. While its absence is conclusive,

its presence is not equally so; but a proof of its *variability* from day to day is really valuable. Whether used in the final interpretation or not, "organic nitrogen" (or that portion of it appearing as albuminoid ammonia) is always determined, together with the other forms, as soon as the sample is received.

A nitrogenous organic compound is dangerous from one of two causes: first, because it is already decaying and harbors pathogenic germs or is giving off toxines; or, second, because it will furnish food for a further development of bacterial life.

As to its derivation from animal or from vegetable matter, there need be little discussion, especially since the recognition of the high nitrogenous content of the blue-green algæ and the nitrogenous character of "soil-humus" and the close approximation of animal and vegetable protoplasm. But it is most important to know if it is *stable*, since one of the best aphorisms ever contributed to the literature of water-analysis is given by Dr. Drown's statement, "A state of change is a state of danger."

Results of the Decay of Nitrogenous Organic Matter.—The products of the first stage of decay of this class of organic matter are carbon dioxide and ammonia. It is to the latter that we turn for the proofs sought, by reason of the methods at hand for detecting such small amounts as one part in a billion parts of water, and because it is for the nitrogen compound that we seek.

The mere presence of free ammonia is not a sufficient indication of recent pollution from human sources. Rain-water, as shown in Table III, contains considerable quantities; decaying blue-green algæ furnish it in still larger amounts, and moreover it offers acceptable food to plant-life and may therefore disappear in the form of combined nitrogen.

Nevertheless, it is to be held as one of the chief witnesses, for it is found in sewage in a thousand times the quantity in which it occurs in ordinary potable water. While putrefactive decay takes place by stages, the lines of division are not sharply drawn, and nitrites, the result of the second stage, may be and usually are found in polluted waters together with ammonia. So frequently is this the case that it is considered circumstantial evidence sufficient to convict when both ammonia and nitrites are found together. (See Tables V and VI, p. 241.)

The reason is not far to seek. Both are not only products of decay, but both are in that unstable condition which indicates active processes, and which therefore means the presence of micro-organisms. Certain exceptions will be noted later.

The fourth form of nitrogen, that found in nitrates, is no longer classed as organic; it is now become food for green plants and cannot nourish the class to which bacteria and pathogenic germs belong, hence it is fair to presume that for lack of food the latter have succumbed or have been otherwise removed. The value of this test is the proof it *sometimes* furnishes of previous sewage pollution, since the nitrogen present in excess of that brought down by rain must have been furnished either by fertilizers, by decaying matter, or by sewage. (See Tables V and VI, p. 241.)

Organic Carbon.—Since by far the largest constituent of organic matter is carbon, some fifty per cent., it might seem as if this was the best indication of pollution. Indeed, it was formerly so considered, and many methods have been devised to show its presence quantitatively. As our knowledge of the slight differences between many forms of animal and vegetable substances grows, the probability of any conclusive evidence from this source, either as to past history or present

condition, decreases. In short, although for many years water-analysts have been striving to perfect methods of detecting certain substances and certain organisms, it would seem as if they were no nearer a discovery of one simple decisive test, but, in most cases, were driven to a somewhat elaborate examination in which one test only furnishes one link in the chain of evidence.

Sanitary Analysis.—The examination of a water to determine its safety for domestic use is called a sanitary analysis, in distinction from that examination which determines its fitness for manufacturing purposes, for use in steam-boilers, or its medicinal value.

Four points are to be determined: First, the amount, if any, of organic matter in a living or dead condition, suspended or dissolved in the water; second, the amount and character of the products of decomposition of organic matter, and their relative proportions to one another; third, the stability of the undecomposed organic substances; fourth, the amount of certain mineral substances dissolved. From these results we draw conclusions as to the present condition and past history of the water. These conclusions are not infallible, but there are enough unavoidable risks in human life without taking unnecessary ones; and if pollution is proved, the cause should be removed or the supply abandoned.

Preliminary Inspection.—So long as the eye can re-enforce the other tests and the whole course of the water may be clearly traced, it is comparatively easy to judge of the character of a supply and of its safety for human use; but when a hole in the ground is the visible source, or the actual history of the water is hidden in unknown distances and depths, the diagnosis is more difficult.

First, the geological horizon and superficial soil must be

studied; the direction and flow of underground water, not the slope of the surface only; the possible sources of danger, occasional as well as constant, within at least a quarter of a mile radius. The composition of unpolluted water of the same region should always be at hand for consultation.

Safe Water.—As has been said, we can no longer require *pure* water; the most that we can demand is that the supply shall be *safe*. To the uninitiated one sample of clear, colorless water seems very like any other. The safe, colored or muddy water of a stream or pond seems less desirable than the clear, cold water of a badly polluted well.

A water may be normally safe and yet, from exceptional circumstances, be for a time a source of danger. In one case the mouth of a well at a factory was overflowed by a contaminated brook raised above its usual level by a heavy shower for half an hour only. Some thirty cases of typhoid fever resulted, so close to one another and so suddenly ceasing as to leave no doubt of the fact that for only a few hours was the water unsafe. How, then, shall a chemist tell if at some past time a water may have been or at some future time may become a source of disease? Only by carefully weighing all the testimony attainable—ocular, chemical, biological, bacteriological—in the light of past experience.

The day of the vest-pocket sample, usually in a flavoring-extract bottle, cork and all, is nearly past, but that of the fruit-jar, with a sticky rubber ring and corroded zinc top, is still with us. That admiration for chemical knowledge and belief in chemical clairvoyance which expects the chemist to decide from a sample while you wait if a certain water caused the death of a person a month since in a distant town under unknown conditions is very trying to the man who knows his own limitations.

The market value of an analysis cannot well be appre-

ciated until a juster estimate of the professional training of the analyst is a part of common knowledge.

Safe and Acceptable Water.—It is not enough that a supply shall be free to-day from disease-germs; it should remain free from changes for a reasonable period of time. Therefore the advice desired by the towns seeking for supplies implies much more than mere analysis; it includes estimates of future changes, of variations due to possible further developments, and of the effect of these variations on *acceptability* as well as safety.

To be fully *acceptable*, a water should be free from color, odor, turbidity, sediment, and of a uniform temperature so low as to admit of use without ice. Only such water as has been earth-filtered and earth-cooled can meet this demand, but the supply of this class is becoming drawn upon to its limit; besides there are difficulties in the conveyance and storage of ground-water which offset many of its advantages.

From the foregoing paragraphs it will be seen not only that waters carry every possible degree of safety or danger according to the country they drain, the number and habits of the people living on the watershed, and the presence or absence of factories, slaughter-houses, etc., but that many elements enter into the judgment of a water-supply, and how different these elements are in different waters. Safe water is that which carries neither seeds of disease nor such substances as are deleterious in any way to mankind in general.

A brown water may yield 20 parts per million organic matter and show 10 parts oxygen consumed, and yet be a safe and wholesome water. A ground-water may show 5 parts nitrates, and yet for ten or twenty years prove a safe supply.

Since, however, water is so universally made a carrier of refuse, it is difficult to find a stream or well which fulfils the

above exacting requirements, and a compromise is made which sets certain arbitrary limits and so keeps the chances small. Such limits are very misleading of themselves, especially if used over a wide extent of territory. The English standards, for instance, are not applicable to eastern North America. Only a study of all local conditions and a wise interpretation of all results can make standard figures of any significance. This is true, also, of bacterial results in surface-waters. In the natural condition of lakes and streams there are so many varieties of bacteria present and in such varying numbers, according to wind and rain and watershed, that taken alone the numerical count gives no more convincing proof than is found in chemical figures.

While it is quite within the limits of possibility that a culture-tube of typhoid bacilli might be emptied into the middle of a river or be washed into a reservoir, and chemical analysis give no sign, yet no continuous natural means of contamination is known which is not accompanied by substances readily detected by suitable chemical examination. In either case an epidemic may or may not result, dependent upon causes other than the mere presence or absence of the micro-organisms.

If drainage from a house or barn is seen entering a stream, it does not need a dozen plate-cultures to prove that there is possible danger. Such tests may, however, when used with skill, serve to trace contamination back to its source, and is another means at the service of the trained water-works superintendent whereby he can keep a close watch over the character of his supply.

As a means of control of the efficiency of filter-plants the bacterial examination is invaluable, and as a knowledge of the forms which accompany pathogenic germs becomes more certain the value of these tests will increase, even if the

classification and identification is not perfected to scientific accuracy.

It is one of the penalties of living in a large city that the water-supply must of necessity be surface-water which has been caught and stored at a distance or that which has been filched from a stream, filtered and made passable. Consequently education must take the place of instinct, and custom must make that acceptable which circumstances render necessary.

THE INTERPRETATION OF ANALYSES.

Experience in cutting through glacial moraines for railways or in driving levels for mining operations does not qualify a man for exploration of a Babylonian or prehistoric mound. Human occupations have left upon the sand and clay evidences which, although so slight as to be unnoticed by the casual observer, are like an open book to him who patiently acquires a knowledge of the meaning of the displacements, discolorations, and enclosed fragments. Flowing water, like sand and clay strata, bears evidences of its previous history no less intelligible to him who has the key to the cipher and who adds to the keen eye of the detective and ready wit of the interpreter the sound judgment of the engineer. Reasoning upon insufficient premises will as often fail in the one case as in the other, while lucky guesses frequently encourage superficiality in both.

After the analyst has entered on the blank (page 141) the six to ten records needed for a ground-water, or the fifteen to twenty for a surface-water; after the columns headed Bacteria, Diatoms, Algæ, etc., have been filled in, there still remains the summing up of the case by the judge. The correct interpretation of results means a knowledge of the source, geological horizon, surroundings, probable

changes, and the significance of each item in this particular case. Each class of water has its own characteristics. The presence, in quantity, of any given element is interpreted according to the kind of water under consideration. Spring-water is, of course, colorless; lake-water of equal safety is probably colored. Spring-water must be, as a rule, free from ammonia; lake-water may at times contain considerable amounts without detracting from its good character.

Classification of Waters. — To facilitate examination, therefore, waters may be divided into three classes: first, cistern, brook, pond, and river water—so-called *surface-water;* second, spring and deep-well water; and third, shallow wells and sewage effluents.

Water of the last two classes has been for greater or less periods of time in contact with rock and filtered through sand, hence is designated as *ground-water.*

A few examples taken from the different kinds of water showing the varying conditions to which they are subjected may serve to make the rules of interpretation clearer.

Surface-Waters.—When rain-water falls on slated or shingled roofs and is conducted into cisterns, it carries with it whatever deposits have collected, the pollen of forest-trees or disease-germs from city slums many miles away; from metal roofs it takes either the metal itself or the paint used to protect the surface. In all cases, lower forms of animal life, small insects, and soot from chimneys may be present. These foreign substances should be at once filtered out without allowing time for organic decay, unless there is an automatic device for wasting the first washings of the collecting surface. There are still substances in solution which would be better away; therefore the water is allowed to stand quietly in order that the changes may have time to take place—to ferment, as it is often technically expressed. After

this season of purification the water is again filtered and stored ready for use. There is usually color and a little ammonia, but rarely nitrates. The soluble metals, if once present, still remain. It goes without saying that all such cisterns must be absolutely impervious to surface drainage. For lack of one or all of these precautions, cistern-water has often been found to be contaminated from cesspools, from leaden or painted roofs, or from decaying organic matter.

Brook-water.—The rain that falls on mountain slopes of granitic or other insoluble rocks washes from them whatever loose earth may have fallen there, and from the firmly fixed lichens the small insects and other animal forms which they harbor. These are transported in brooks to the lower lands where the organisms decay, the heavier earthy particles falling out by the way.

If the upland rocks and soil yield a portion of mineral salts to the water, it may come out clear and colorless even if it has not penetrated to an appreciable depth.

The water from these forest brooks, after remaining impounded in a clean lake or reservoir, exposed to sunlight and air, often becomes the safest source of supply. As with cisterns, so with reservoirs, filtration, natural or artificial, may take place previous or subsequent to storage, or both before and after.

Lake or Mixed Water.—Lakes are fed by springs as well as by brooks, or by that portion of rainfall which passes a few inches below the surface, and is filtered before reaching the main body. If the banks are sandy and uninhabited, the water will show good effects from this filtration; but if the seepage-water comes from a settled country, it will bring either ammonia or nitrates. The analysis will quickly show this if the water sample can be taken before it has mixed with that bearing the spores of plants which are fed by

nitrates. Often the very presence of these plants furnishes the proof sought.

River-waters.—A large stream, especially a muddy one, may receive the drainage of half a dozen cities a hundred miles distant and yet not give conclusive evidence of dangerous contamination, while a small river with a rapid current may become unsafe from the presence of a few villages a dozen miles away.

Northeastern America is so well supplied with uninhabited high lands for collecting-grounds, and with basins in the glacial drift for storage in natural or artificial lakes, that very few rivers need to be used after they have become polluted. The Merrimac and the Hudson are, however, so used. In other parts of the country the use of rivers is an increasing necessity, requiring municipal filter plants.

From every point of view organic matter should be kept as far as possible out of running streams which may at any time be needed for public supplies, or the natural purification by algæ should precede the final filtration and storage. It is quite probable that this double treatment may be more frequently required as unpolluted water becomes more scarce.

What the method of filtration shall be depends upon the character of the water, whether clear or turbid with clay, whether certainly polluted or only with a remote possibility of contamination. Each problem must be studied by itself without prejudice in favor of any one method. It is the result which must be kept in mind, namely, the furnishing of safe and acceptable water to the community.

Effect of the Storage of Surface-water.—In interpreting his results, the analyst should take into account the influence which the keeping of water in basins has upon its character. Storage of surface-water is of utmost importance in all cases

of doubt. Most disease-germs find such water an unfavorable medium for prolonged life, since exposure to sunlight soon destroys the darkness-loving bacteria, and a certain sterilizing effect results from the growth of green algæ, so that water considerably polluted becomes purified if given time for the various agents to do their work; but time is essential.

Odors.—For surface-waters one of the links in the chain of evidence is found in the odor, cold and hot, which to the trained and sensitive nose often gives convincing testimony. A musty odor, unmistakably different from a mouldy vegetable smell, betrays sewage contamination even when the chemical analysis might not be convincing. This odor is not always taken out by filtration, neither is that of certain organisms growing in stored water, notably *Anabæna* and *Synura*. A study of these organisms is invaluable to the routine observer who watches the seasonal and annual changes in his reservoir.

Turbidity and Sediment.—The determination of turbidity and sediment, added to the odor, tells much to the expert, but very little to the inexperienced student. Turbidity may be due to drainage contamination, to growth of bacteria, to clay, to iron, to swarms of micro-organisms. Sediment may be sand, zoöglea, fragments of plants or animals, or ferric oxide.

Filtration.—The subject of filtration has been so extensively treated elsewhere that the student is referred to the bibliography on page 263. There are cases in which it is preferable to run the risk of too much alum in the drinking-water, and too much sulphuric acid in boiler feed-water, rather than of too many micro-organisms with the accompanying organic matter.

It will have been noticed that the ideal natural water is

that which has been earth-filtered, and thus all suspended matter, including microbes, has been removed. This supposes that sufficient time has elapsed so that all decomposing organic matter has been destroyed. Man tries to imitate nature's processes, but expects to accomplish it in moments instead of months.

The era of house-filters, those admirable culture-grounds for bacteria, is happily nearly past. Taxpayers are becoming convinced that a good original water-supply in competent hands is worth paying for. Where straining only is needed, a flannel bag washed daily is as efficient as any faucet-filter. If the latter takes out color as well, it should be closely watched. Water should not be first boiled and then filtered, but first filtered and then boiled.

Summary.—Surface-water.—In general it may be said that the waters of the first class found in New England are generally more or less colored, and contain more or less suspended organic life and its *débris*, which often impart a decided odor to the water. These waters, draining for the most part wooded and sparsely populated regions, are low in free ammonia, nitrates, and nitrites; low, also, in mineral salts, and with only a slight excess of chlorine over the normal. They are usually high in organic matter and albuminoid ammonia even when entirely free from pollution.

In other parts of the United States surface-waters may be low in color, but with much suspended clay and silt, and may hold in solution notable quantities of mineral salts. The latter aid greatly in the clarification by artificial filtration, which is so often rendered necessary by the excessive turbidity even if not by sewage contamination.

In Table IV, page 239, will be found examples showing at a glance how profoundly the character of a water is affected by the geological horizon, whether its source is in the glacial

drift of the Appalachian region, or in the limestone of the Hudson River Valley, or in the saline deposits of the subsided areas.

Deep Wells and Springs.—The waters of the second class are derived from the depths of the earth, far below any possible surface contamination, and have long been imprisoned in the dark and cold, and often subjected to great pressure. The influence of pressure on organisms has not been entirely worked out, but from what is known it is probably very unfavorable to the life of the lower organisms. The results of many bacterial examinations have been vitiated by the difficulty of securing a sample from great depths without contamination by surface exposure—pipes open to the air harboring many forms of life.

Deep wells, 700 feet and more, are not likely to be dangerous. They may often contain ammonia from prehistoric coal-fields or tertiary deposits, but rarely nitrates. This is accounted for by the fact that "the result of the changes of the nitrogenous organic substances which fall into the earth is, without doubt, frequently the formation of gaseous nitrogen." Also, that "salts of nitric acid on penetrating into the depths of the earth give up their oxygen." *

Owing to their long sojourn in the depths of the earth, these waters are higher in mineral substances than surface-waters. Since their origin is unknown, the chlorine cannot be correctly gauged, especially as there are saline waters deep down in rock cavities in all parts of the world.

It is usually believed that these deep wells furnish a safe, palatable water when the kind and amount of mineral matter is not objectionable.

Shallow Wells.—It is not to be wondered at that waters

* Mendeléeff: "Chemistry," p. 223.

of the third class—ground-water, taken from just beneath the surface layers of the soil—should contain many substances foreign to the waters about them as well as to those at greater depths. The shallow wells, which are practically more or less diluted sewage effluents, present the greatest variety. They may be clear and colorless and show as great organic purity as the best mountain spring. In other cases, the overworked filter permits the passage of organisms and undecomposed material. In either case there will be found those compounds which, being soluble and stable, are carried with the water as signs to be read by him who knows the language. A complete history of each specimen of this class of ground-water is desirable, and with sufficient patience and care it may be obtained with reasonable accuracy, if the principles governing the circulation of water and the changes of the organic matter it carries be kept well in mind.

It is certain at once that absence of color, of organic matter in any form, and of odor should be insisted upon, for ground-water is filtered water and the filter should be doing its work.

A modicum of geological knowledge is essential, as the presence of shaly or slaty rock will permit the passage into underground water of surface drainage with less purification than will a granite or sandstone region. A clayey soil is a less efficient filter than a sandy loam and permits the pollution to travel farther.

Nitrogen in Well-water.—It may be taken as an axiom that the only form of nitrogen permissible in a good ground-water is that of nitrates, a fully oxidized or mineralized food for green plants. If nitrites are also present, a source of pollution is at hand, for, as has been said, nitrites indicate either a stage of oxidation not completed or one of reduction from nitrates in the presence of organic matter. If free am-

monia be present, it is safe to say that the source is not only near but in actual contact, since but a few hours' time is needed to oxidize the ammonia in any soil not waterlogged. It may also be pretty safe to assume that bacteria are present, since ammonia is the first stage of that decomposition which they accompany. It is the part of prudence, therefore, to avoid any water which contains both free ammonia and nitrites above .200 or .300 parts per million of the first, and .020 or .030 of the second.

The absorption of nitrogen by plants is rarely complete, so that it usually appears in far larger quantities in contaminated ground-waters than could be obtained from purified rain-water. The leaching cesspool discharges its liquid contents below the zone of green-plant life; fertilized soil also yields a portion of its food value to the lower layers. A small portion of the nitrogen of vegetable origin may appear as nitrates, but only as a derivative of soil rich in humus is it likely to play any considerable part. In eastern America nitrates above 0.5 parts per million would arouse suspicion, and above 5 parts would in most cases prove previous pollution.

It is evident that in the use of nitrogen as an indicator of the conditions of a water we are limited, by the changeful character of the compounds, to certain not-to-be-mistaken amounts, and that in the majority of cases the evidence given is not decisive.

Chlorine in Well-water.—Fortunately there is another element not so eagerly sought for by plants and not liable to so many transformations. Thanks to the great solubility of its common compounds and to their stability, chlorine, once a constituent of a given body of water, is not extracted therefrom and remains as a telltale to reveal the past history of a stream or spring. If a man is judged by the company he

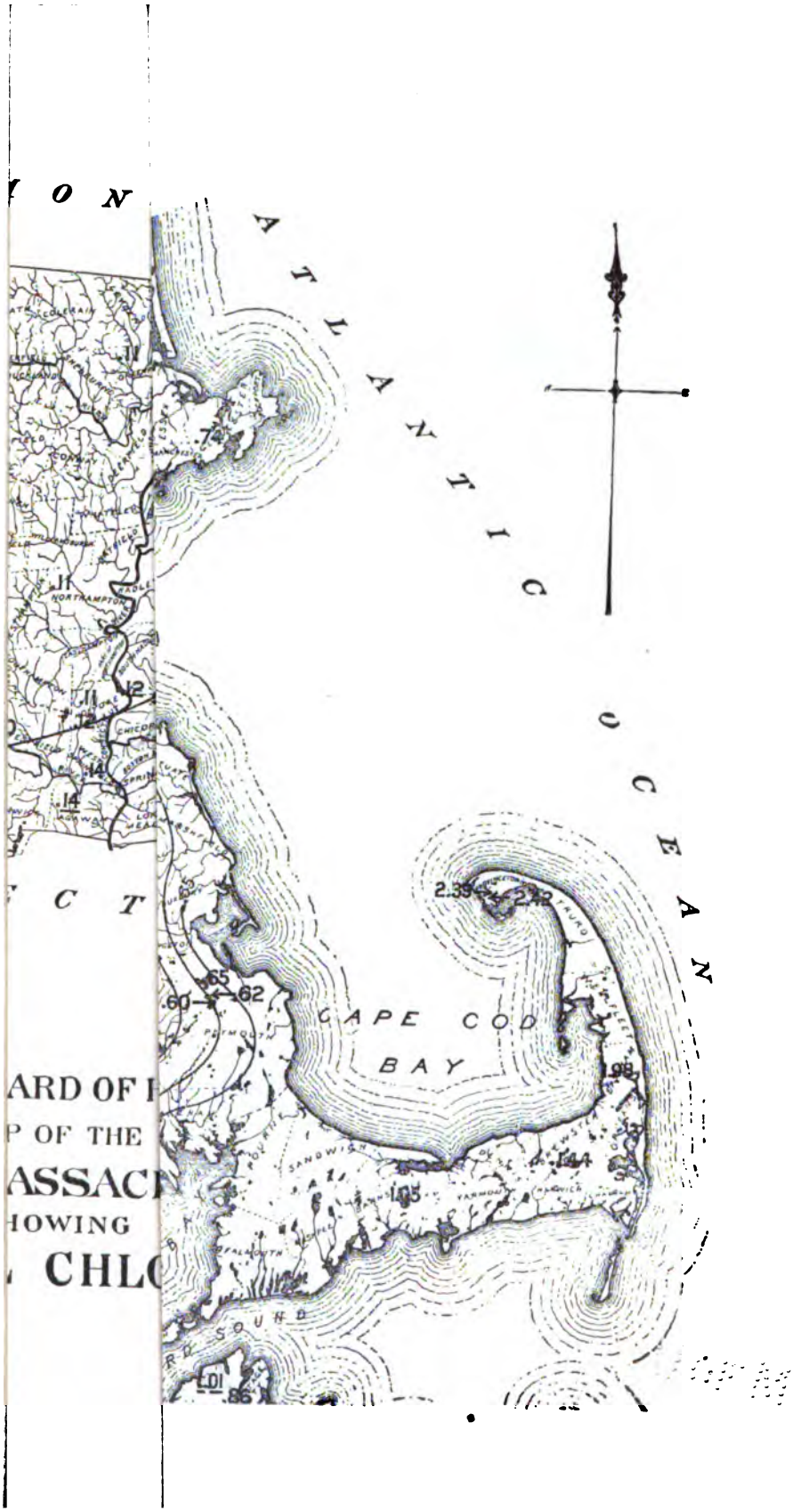
ATLANTIC OCEAN
CAPE COD BAY
SOUND

keeps, much more a water-supply. From sewage all the nitrogen may be removed and the chlorine still remain.

But in order to use this information with any degree of certainty the normal chlorine of the locality must be known. If a map showing isochlors has been made of the region or State, and if there are no geological deposits to interfere, this is easy; but if the chemist or engineer has an unknown country to report upon, it will be necessary to examine the local conditions and to choose six, eight, or ten samples of probable freedom from contamination and to test them for comparison. The sources of the excess of chlorine over the normal are usually the sink-drain with its burden of salted water from domestic operations; the house-drain, with its chlorine-containing excreta; and the stable-drain, with a slight chlorine content in comparison with the other two.

Mineral Substances.—Since water is a universal solvent, it is not surprising to find considerable amounts of mineral matter in the two columns "Total Solid Residue on Evaporation" and "Hardness." How much calcium sulphate or magnesium chloride or other soluble mineral is allowable in a potable water is for the physician rather than the chemist to say. As has been said, the human system possesses great adaptability, not only for different foods, but for mineral substances water-carried. Not so the steam-boiler or the laundry-tub, which reacts very sensitively and affects the pockets of the consumers. In a region of soft water, high solids with chlorine and nitrates indicate sewage pollution. Silica is much more commonly present even in surface-waters than is often supposed. What its effect may be is unknown. Iron is not uncommonly found in combination with organic matter in either surface or imperfectly filtered waters in contact with soils poor in calcium salts. It is frequently accompanied by free ammonia, which causes an

abundant growth of *Crenothrix*. It is also present in deep wells in the form of carbonate, which precipitates on exposure to warm air.

In a considerable number of cases of public water-supply there is a mixture of surface and ground water which complicates the verdict, requiring a most delicate balancing of probabilities. The mineral contents often aid in this decision. Well-waters, too, are often exposed to surface-wash because of poor protection at the mouth. *Cyclops* or other surface-water organisms often indicate this.

Water-pipes.—After all, if the pipes conveying the water are of lead or brass, an additional danger appears. Generally speaking, the purer the water the greater the risk. No common metal seems to withstand the action of soft water; six to eight years being the average age of galvanized pipe, and eight to ten of iron pipe. It would seem as if wooden pipe must come into greater use until some kind of glass is invented which will withstand this corrosive action and yet admit of plumber's connections.

Value of Tests.—It is often asked if some tests cannot be made by the ordinary person of average intelligence which will enable him to tell the quality of a water as well as the expert to whom he pays ten or twenty dollars for an opinion. A careful perusal of the preceding pages will have answered the question in the negative. There is no assay of water as there is of gold and silver. Not one but ten or twenty tests must be made. Not only must the tests be made with the utmost care and cleanliness of person, utensils, and room, but the results must be studied in the light of other experience and other knowledge, geological and biological, and after all this is done there is an array of circumstantial evidence which must be carefully weighed by one whose judgment and experience enable him to read clearly where another might

see nothing. The value of a water-analysis is in direct proportion to the knowledge and experience of the one who interprets it. Clinical skill in addition to theoretical knowledge is required to interpret the figures obtained in the course of a water-analysis, as in the symptoms of a disease: and the analogy goes still further, for as some diseases are clearly defined, others are so complicated that only those who have had long experience can outline a safe course of treatment; so some waters bear the marks of their character so plainly as not to admit of mistake, while others require most careful study. For these reasons the value of water-analysis should not be decried because the fears aroused by reports given by unskilled analysts prove groundless, any more than the practice of medicine should be discarded because inexperienced men make mistakes.

Is the water in any given case safe for drinking? To answer this question there is needed a knowledge wider than a chemist's of the relation of decaying organic matter and of the germ-carrying power of water to outbreaks of disease. There must be added the knowledge of the biologist, the engineer, and the sanitarian.

CHAPTER VII.

ANALYTICAL METHODS.*

General Statements.—Water-analysis cannot be carried on in an ordinary laboratory. In order to obtain satisfactory results it is necessary to have a room set apart for the purpose, and to exclude rigidly all operations which tend to the production of fumes or dust. Where such minute traces of substances are dealt with as in water-analysis, too much care cannot be taken to insure the absolute cleanliness of the apparatus and the surroundings. It is desirable that the room be well lighted, and if possible the windows should face toward the north.

The methods for the examination of water which are described in this chapter by no means comprise all that are in use. The directions are given for the use of students in our own laboratory under the conditions obtaining, i.e., of large classes and of several courses of study, with especial reference to educational rather than purely technical needs, and in some cases, no doubt, the traditions of thirty years may have unduly persisted. The methods have been so selected as to introduce a variety of apparatus and to illustrate principles. They have also been subjected to a thorough test in meeting the demands of practical work.

Collection of Samples.—For the collection of water samples, glass-stoppered bottles of about a gallon capacity are best. Those used in this laboratory are of white glass, fifteen inches high to the top of the stopper, five and a half inches

* See Report of Committee on Standard Methods of Water-analysis, *Jour. of Infectious Diseases*, Supplement No. 1, May, 1905.

in diameter, and weigh about three pounds. They have flat, mushroom stoppers, on which is engraved a number to correspond with that on the bottle. The bottles, before being sent out, are thoroughly cleaned with potassium bichromate and sulphuric acid, washed with distilled water and dried. If glass-stoppered bottles are not at hand, new demijohns fitted with *new* corks may be used. A glass bottle or a demijohn is much to be preferred to an earthenware jug, because, if for no other reason, it is so much easier to be sure that the interior is clean. It should always be borne in mind that in water-analysis the question is one of very minute quantities of material, and that the methods to be employed are extremely delicate. Hence, in the case of many waters, careless handling of the sample would contaminate the water to a sufficient extent to render valueless the results obtained in the laboratory. In collecting samples, the following directions should be closely followed: *

Directions for Collecting Samples for Analysis.—*From a Water-tap.*—Let the water run freely from the tap for a few minutes before collecting the sample. Then place the bottle directly under the tap and rinse it out with the water three times, pouring out the water completely each time. Place it again under the tap; fill it to overflowing and pour out a small quantity so that there shall be left an air-space under the stopper of about an inch. Rinse off the stopper with flowing water; put it into the bottle while still wet and secure it by tying over it a clean piece of cotton cloth. Seal the ends of the string on the top of the stopper. Under no circumstances touch the inside of the neck of the bottle or the stem of the stopper with the hand, or wipe it with a cloth.

From a Stream, Pond, or Reservoir.—Rinse the bottle and

* Ann. Rep. Mass. State Board of Health, 1890, p. 520.

stopper with the water, if this can be done without stirring up the sediment on the bottom. Then sink the bottle, with the stopper in place, entirely beneath the surface of the water and take out the stopper at a distance of twelve inches or more below the surface. When the bottle is full replace the stopper, below the surface if possible, and secure it as directed above. It will be found convenient, in taking samples in this way, to have the bottle weighted so that it will sink below the surface, and to remove the stopper by a cord. It is important that the sample should be obtained free from the sediment at the bottom of a stream and from the scum on the surface. If a stream should not be deep enough to admit of this method of taking a sample, dip up the water with an absolutely clean vessel and pour it into the bottle after the latter has been rinsed.

The sample of water should be collected immediately before shipping by express, so that as little time as possible shall intervene between the collection of the sample and its examination. All possible information should be furnished concerning the source of the water and of possible sources of contamination. For example, in the case of a well, the proximity of dwellings, cesspools, or drains should be recorded, and the character and slope of the soil, whether toward or away from the well, should be noted. In the case of a surface-water, mention any abnormal or unusual conditions; as, for instance, if the streams or ponds are swollen by recent heavy rains, or are unusually low in consequence of prolonged drought, or if there be a great deal of vegetable growth in or on the surface of the water. Record, in short, any circumstantial evidence which by any possibility may aid in the final judgment.

The question of proper collection of samples is an important one, and the chemist is perfectly justified in refusing to

give an opinion in regard to the purity of a water which he has not himself collected. The ignorance and carelessness shown by people who send samples for analysis are oftentimes quite amusing. Samples have been received at this laboratory in almost every kind of container imaginable, from an imperfectly rinsed whisky-bottle to a discarded syrup-jug, with about an inch of maple sugar in the bottom. One sample was sent all the way from Georgia in a stone jug with a corn-cob inserted for a stopper. Others are received with the stopper carefully (?) protected by a mass of sealing-wax or candle-grease. A favorite way is to send the sample in a fruit-jar packed in sawdust or straw. Opinions evidently differ greatly, too, in regard to the size of sample that is needed. It is no uncommon occurrence to have a person come into the laboratory with the remark, " Here is a sample of water that I want analyzed," supplemented by the production from a coat-pocket of a homœopathic vial or a sample of half a pint or so of water. Of course, in cases like these practically nothing can be done.

Preparation of the Sample for Analysis.—Since changes in the composition of a contaminated water are constantly going on, the analysis of the sample should be begun without delay. The bottle is held under the tap, and the neck and stopper are washed free from adhering dust. The stopper is rinsed off with some of the water from the bottle. *Qualitative tests should be made for ammonia, nitrites and chlorine.* With waters containing much suspended matter, and in the case of surface-waters in which it is desired to distinguish between the organic matter in solution and that in suspension, a portion of the water should be filtered. In most cases the suspended matter can be removed by filtration through paper. For this purpose only the best Swedish filter-paper should be used, and the filters should be first

thoroughly washed with ammonia-free water. With some waters containing very finely divided clay in suspension, filtration through paper will not be satisfactory, and the sample must be filtered by suction through a cylinder of ung'azed porcelain, such as an ordinary Chamberland-Pasteur filter-tube. In the filtered water it is customary to determine the dissolved solids, the albuminoid ammonia, or the organic nitrogen, and the color.

Determination of Free and Albuminoid Ammonia.—*Apparatus.**—The apparatus used for the determination of ammonia is that shown in Fig. 8. It consists of a round-bottomed flask of 900 c.c. capacity, with square shoulders and a narrow neck five inches long, and an ordinary Liebig condenser fitted with an inner tube of block tin, $^3/_{16}$ of an inch in diameter. The flask is closed by a cork carrying a glass tube bent nearly at right angles, which slips for some distance within the tin tube of the condenser. A tight joint is made by means of a large cork, which is shown in section in Fig. 9. The large cork serves the double purpose of making a tight joint with the

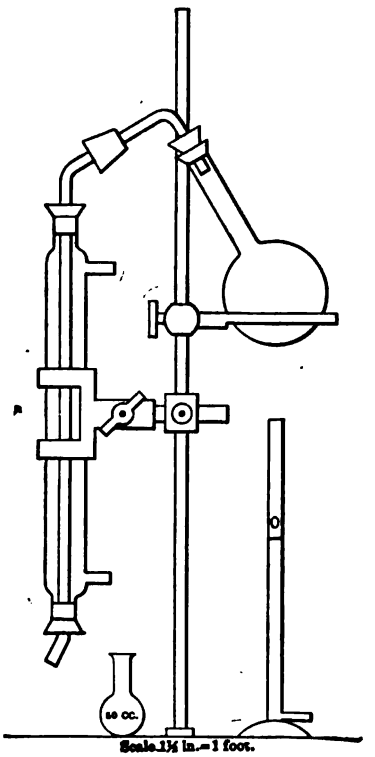

FIG. 8.—Apparatus for Ammonia Distillation.

* A. H. Gill: *J. Anal. and App. Chem.*, 6 (*1892*), 669.

condenser and also as a convenient means for handling the small glass tube. In order to remove the cork from the distilling-flask, the glass tube carrying it is simply turned to one side, using the large cork as a pivot. The flasks are heated with the free flame of a Bunsen burner.

New flasks are treated with boiling dilute sulphuric acid and potassium bichromate before they are used. New corks should be steamed out for one or two hours. A good, sound cork will last for several months with daily use. The dis-

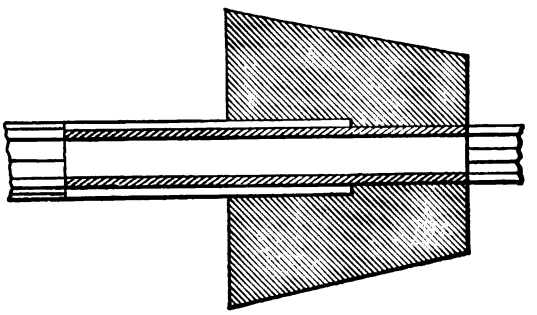

FIG. 9.

tillates are received into small 50-c.c. flasks and poured into Nessler tubes for nesslerization. The Nessler tubes are 11 inches long and $\frac{5}{8}$-inch internal diameter, the 50-c.c. mark being about two inches from the top. It is desirable to so arrange the apparatus as to collect the distillates directly in the Nessler tubes and at the same time render the apparatus more compact by having several condenser tubes run through a common cooling tank. For class work, however, the apparatus just described has been found most suitable.

Directions.—Free the apparatus from ammonia by distilling off the water in the flask, testing each 50-c.c. portion of the distillate until no color is given with the Nessler reagent. When the distillate is free from ammonia, pour the

water left in the flasks into the bottle marked "Ammonia-free residues."

Shake the bottle thoroughly to mix the sample. For determining the ammonia measure out in a calibrated flask a portion, usually 500 c.c., the amount taken depending upon the result of the qualitative test. Pour this into the distilling-flask, and distil over three portions of 50 c.c. each into Nessler tubes or into the graduated flasks.

In dealing with sewage or sewage effluents, which are very high in free ammonia, if the ammonia were collected in three portions, so much would distil over in the first portion that the color given with Nessler's reagent would often be too deep to read or a precipitate might form. To avoid this the total distillate of 150 to 175 c.c. is collected in a 200-c.c. graduated flask, made up to the mark, thoroughly mixed by pouring, and then 50 c.c. of it taken for nesslerization. In this way the ammonia is distributed more evenly in the distillate and the determination is not sacrificed.

Notes.—When the amount of ammonia shown by the qualitative test is high—i.e., shows a color equivalent to 1. c.c. of the standard ammonia solution—a less quantity than 500 c.c. should be taken for the distillation, 100 c.c. or, in the case of sewage, even 10 c.c. being diluted to 500 c.c. with water free from ammonia. Sewage and soils may be distilled with steam in the apparatus figured on page 106 under the Kjeldahl process.

After the free ammonia has been distilled off, allow the contents of the flask to cool slightly; then add 40 c.c. of alkaline permanganate through a funnel, taking care that none of the alkaline soluion touches the neck of the flask, and proceed with the distillation of the albuminoid ammonia; that is to say, the determination of the nitrogen of the undecomposed organic matter. With colored surface-waters distil off five

portions of 50 c.c. each; with waters of low organic content three or four portions will suffice.

In order to obtain about one half the total organic nitrogen regulate the height of the flame so that the time of distilling 50 c.c. shall not be more than eight and not less than five minutes.

It is impossible to convert all of the organic nitrogen into ammonia by boiling with alkaline permanganate. The amount of ammonia which is thus obtained depends not only upon the character of the substances, but also upon the concentration of the solution and the rate of boiling. In order that the albuminoid ammonia in potable waters shall bear some definite relation to the total organic nitrogen, it is necessary that these conditions shall be duplicated as nearly as possible in different determinations; that is, the alkaline permanganate must be added to a definite volume of the water, and the boiling must be carried on at a definite rate. Some of the highly colored surface-waters give up their nitrogen very slowly by this treatment; polluted waters, on the other hand, yield the ammonia more rapidly, so that the observation of the relative amounts found in the successive portions is of the utmost importance in forming a judgment.

Have the Nessler tubes clean and thoroughly rinsed with ammonia-free water. Unless permanent standards are used prepare standards by adding to Nessler tubes nearly filled with ammonia-free water varying quantities of the standard ammonium chloride solution; for instance, 0.1, 0.3, 0.5, 0.7, 1.0, 1.3, 1.5, 2.0, 2.5, 4.0, 6.0 c.c. The standard ammonium chloride solution contains .00001 gram N in one cubic centimeter.

Mix the contents of the tubes by rotating them between the palms of the hands (never shake them like a test-tube or stir them with a rod), allow them to stand for two or three minutes, and add 1 c.c. of the Nessler's reagent to the whole

set, and to the samples to be tested, as rapidly as possible. At the end of ten minutes match the colors and record the amount of ammonia.

As an example of a colored surface-water may be given the following results from distilling 500 c.c.:

Free Ammonia.		Albuminoid Ammonia.	
1st 50 c.c.,	0.7 c.c.	1st 50 c.c.,	4.5 c.c.
2d 50 c.c.,	0.3 c.c.	2d 50 c.c.,	2.8 c.c.
3d 50 c.c.,	0.0 c.c.	3d 50 c.c.,	1.5 c.c.
		4th 50 c.c.,	1.0 c.c.
		5th 50 c.c.,	0.5 c.c.
	1.0 c.c.		10.3 cc..

In this case the free ammonia would be 0.020 and the albuminoid ammonia .206 parts per million.

In the case of water from suspicious wells and of sewage effluents, about 0.5 gram of freshly ignited sodium carbonate should be added before distillation, in order to make sure that the reaction of the water is not acid, and to decompose any urea which may be present. This will not be necessary with ordinary surface-waters, as experience has shown that they almost always have a slight alkaline reaction.

A depth of color given by 6 c.c. of the standard ammonium chloride with the Nessler reagent is about the limit of satisfactory comparison in the 11-inch 50 c.c. tubes. The color given by 10 or 12 c.c. of the standard may be matched in the 100 c.c. tubes with a depth of 5 inches and a diameter of 1¼ inches.

For most cases where great exactness is not essential it is possible to divide the 50 c.c. or the 100 c.c. into two equal parts by pouring into a tube the exact counterpart of the standard tube and matching the color. It is even possible to closely approximate the correct result by the use of a foot rule. The standard is, we will assume, 5 c.c. The height of liquid in

the tube to be tested, we will call 9 inches. If the height of the column left which matches 5 c.c. is 3 inches, then the reading was 15 c.c. of the standard.

The limit of solubility of the mercur-ammonium iodide is reached at 25 or 30 c.c. of the standard in 50 c.c. The incipient precipitate not only changes the color of the solution but causes a slight milkiness or turbidity which prevents a sharp reading of the color.

The test is an excellent example of quantitive color work when carried out under strictly comparable conditions.

It should perhaps be stated that in both the ammonium and nitrite determinations, as also in that of iron, dilution of the sample in which the color is already developed does not give a correct result. Therefore dilution if necessary must be made before the reagents are added.

In order to secure the most accurate results it is important that the temperature of the distillates to be nesslerized and of the standards be the same, since the warmer solutions give a more intense color with the Nessler reagent.

The compounds produced by the action of ammonia on mercuric solutions are considered as substitutions of 1 Hg for 2H in NH_4, and are called mercur-ammoniums. Tetramercur-ammonium iodide (NHg_2I), the compound formed by addition of the Nessler reagent, is a brown precipitate, soluble in excess of KI in the presence of KOH with a brownish-yellow color proportional within certain limits to the amount of NH_3:

$$NH_3 + (2HgI_2 + 2KI + 3KOH) = NHg_2I + 5KI + 3H_2O.$$

The "free ammonia" in all probability does not exist in the water in a free state or as the hydroxide; it is probably present in the form of carbonate or of chloride. When water containing these or similar compounds of ammonia is boiled, they are decomposed and free ammonia passes off with the

steam and is found in the distillate; hence the origin of the name.

Determination of Total Organic Nitrogen by the Kjeldahl Process.—*Directions.*—Measure 500 c.c. of the water into a round-bottomed flask of 750 c.c. capacity and

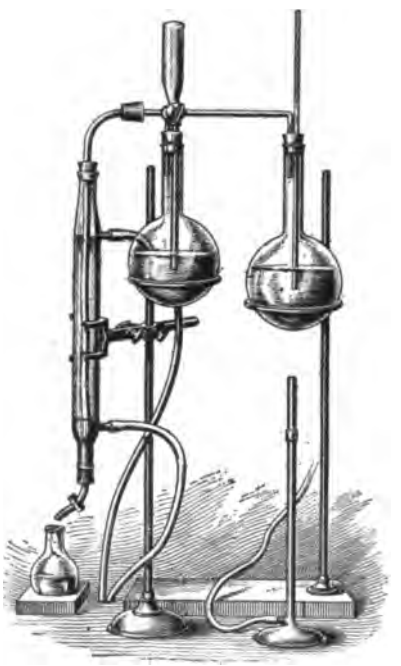

FIG. 10.—Apparatus for Distilling Ammonia by Steam.

boil until about 200 c.c. have been driven off. (The free ammonia which is thus expelled may be determined, if desired, by connecting the flask with a condenser.) Allow the water remaining in the flask to cool, and add 10 c.c. of pure concentrated sulphuric acid free from nitrogen. Mix by shaking; place the flask in an inclined position on wire

gauze under the hood and boil cautiously until the water is all driven off. Place a small funnel in the neck of the flask to prevent the escape of acid fumes, and continue the heating for at least half an hour after the sulphuric acid becomes white. Meanwhile rinse out the distilling apparatus (see Fig. 10), and free it from ammonia as usual. Then, after the acid in the digestion-flask has cooled, rinse down the neck of the flask with 100 c.c. of ammonia-free water and attach the flask to the distillation apparatus. Add 100 c.c. of potassium hydroxide solution through the separatory funnel and distil off the ammonia by steam, receiving the distillate in a 250-c.c. graduated flask. Conduct the distillation rather slowly until the first 50 c.c. have distilled over, then distil more rapidly until about 175 c.c. have been collected. Make the volume of the distillate up to 250 c.c. with ammonia-free water, mix it thoroughly and take 50 c.c. for nesslerization.

Notes.—The principles involved in the method consist in the oxidation of the carbon and hydrogen of the organic matter by boiling sulphuric acid, the nitrogen being converted into ammonia and held by the acid as ammonium sulphate. The ammonia is then liberated and distilled off from an alkaline solution. The use of mercury and of potassium permanganate to assist in the oxidation has been found to be unnecessary, as the organic matter in natural waters is much more easily oxidized than in other substances,—flour, for instance. The presence of nitrates and nitrites in waters has not been found to interfere with the accurate determination of the organic nitrogen. The error which has been found by Kjeldahl and Warrington to be caused by the presence of nitrates seems to disappear when the organic material is diluted to the considerable extent that exists in natural waters. The high chlorine found in some well-waters does

not interfere with the method to any extent, but this determination does not possess much value in this class of waters, which are low in organic nitrogen.

In carrying out the digestion with sulphuric acid, the greatest care must be taken to prevent access of ammonia or dust from any source. The acid solutions will absorb ammonia from the air or from the dust of the laboratory if they are allowed to remain uncovered for any length of time. This source of error may in some instances be sufficiently large to render a determination valueless, even in a room which is to all appearances free from ammonia-fumes. Hence the operation should, if possible, be carried to completion within twenty-four hours, and for every set of determinations a blank analysis should be made with ammonia-free water in order to make a correction for the ammonia in the reagents, and for that accidentally introduced during the process.

As the result of many hundred comparative determinations of the organic nitrogen and of the albuminoid ammonia in natural waters which take their origin in the glacial drift, it has been found that the nitrogen given by the albuminoid-ammonia process as directed in the previous pages is about one-half of the total organic nitrogen as given by the Kjeldahl process; in the case of sewages and polluted waters it is very variable owing to their irregular composition.

Determination of Nitrogen in the Form of Nitrites.—*Directions.*—When the determination of the free and albuminoid ammonia is well under way, the estimation of nitrogen in the next stage of decay, that of nitrites, should be begun. If the water is colorless, measure out the required amount, usually 100 c.c., into a 100-c.c. tube. If the water possesses color which cannot be removed by simple filtration, it should be decolorized as follows: Thoroughly rinse

with the water a 250-c.c. glass-stoppered bottle; pour into it about 200 c.c. of the sample, add about 3 c.c. of the milk of alumina and shake the bottle vigorously. Let the bottle stand for ten or fifteen minutes and filter through a small plaited filter which has been thoroughly washed with water free from nitrites. From this filtrate take 10 c.c. for nitrates (see p. 110). To 100 c.c. of the filtered sample or of the originally colorless water add 10 c.c. of sulphanilic acid in acetic acid and 10 c.c. of naphthylamine acetate.

After standing 5 to 10 minutes, not longer, compare with the standards made with the nitrite solution or, better, with 2×4 inch pieces of Milton Bradley's standard papers* the VR, violet-red tint 2 which is an exact match for the color given by 5 c.c. or VR, tint 1, which matches 10 c.c. of the standard nitrite solution in a 100-c.c. Nessler tube with a depth of 5 inches to the graduation. If 100 c.c. of the sample is used this measures the nitrites in parts per million. Good waters show considerably less than .005, suspicious waters between .005 and .010, bad waters may show from .000 to .300 or even more. The same use of the foot rule and aliquot part may be made as above in the ammonia determination.

One cubic centimeter of the standard nitrite solution contains 0.0000001 gram N as nitrite. The determination must be completed within half an hour, since the air of a room in which gas is burned contains nitrites.†

Notes.—If the color obtained is more than that given by 20 c.c. of the standard solution, as it may be in the case of water from bad wells and sewage effluents, the water should be diluted with nitrite-free water, 10 c.c. or even 1 c.c. being made up to 100 c.c. before adding the reagents, since colors

* Mulliken's "Identification of Pure Organic Compounds," Sheet A, Color Standard.

† Defren: *Tech. Quart.*, 9 (*1896*), 238; Axson: *loc. cit.*, 12 (*1899*), 219.

above 20 c.c. are too deep for accurate comparison. In many cases, however, it may be more convenient and sufficiently accurate, where the colors are not very much greater than 20 c.c., to read the color in an aliquot part, as described in the determination of ammonia on page 104.

The reactions which take place consist first in the diazotizing of the sulphanilic acid by the nitrite present in acid solution, forming diazobenzenesulphonic anhydride. This reacts with the naphtylamine hydrochlorate, forming azo-α-amidonaphtylic parabenzol-sulphonic acid, which gives the pink color to the solution, the amount formed depending upon the amount of nitrite present.

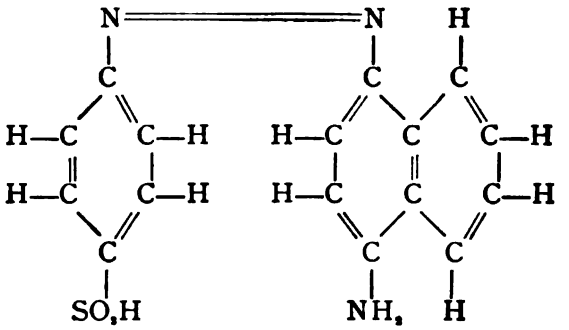

Determination of Nitrogen in the Form of Nitrates.* —*Directions.*—Nitrogen in the fourth stage, that of nitrates, is next determined. In the case of ground-waters, or sewage effluents, measure 2 c.c. from the bottle with a capillary pipette, into a three-inch porcelain evaporating-dish; for surface-waters, always low in nitrates, take 10 c.c. from the portion already decolorized in the determination of the nitrites. Place the dishes on the top of the water-bath and let their contents evaporate gently until one or two drops are left; then set them away in a place free from dust, that the remainder may evaporate spontaneously. Do not let them go quite to dryness on the bath.

* Sprengel: *Pogg. Ann.*, 121, 188. Grandval and Lajoux: *Compt. rend.*, 101, 62. Gill: *J. Am. Chem. Soc.*, 16 (*1894*), 122.

When the water is entirely evaporated, drop six drops of phenol-disulphonic acid directly upon the dry residue and rub it around with a glass rod to insure complete contact of the acid and the residue in the dish. Dilute the acid with 7 c.c. of distilled water and add 3 c.c. of ammonium hydrate (1:1) or if only one laboratory is available KOH (1:3) since no ammonium hydrate solutions should be allowed in a distilling laboratory.

To prepare the standards to be matched in the small porcelain dishes, measure out the varying amounts of the standard nitrate solution, for instance 0.5, 1.0 c.c. to 8 c.c., add enough water to make the volume 10 c.c. and two or three drops of the alkaline hydrate.

For very low or very high colors the matching is most satisfactorily done in 50-c.c. Nessler tubes, diluting to 50 c.c. or reading an aliquot portion. For matching the lowest colors, which in this case is safely done, 5 or 6 inch high tubes cut from broken Nessler tubes are very satisfactory.

To prepare standards in Nessler tubes. A portion of water is made alkaline, and the standard is run in little by little until it matches the lowest color. Then more is added until the next color is matched, and so on to the highest color.

Notes.—It will be found that if 10 c.c. of a colored water be evaporated directly, the color obtained with the reagents will be much deeper as well as browner than that given by the standards; hence the necessity for first decolorizing.

Chlorides interfere with the accuracy of the method, but not to any extent when chlorine is present in less than 20 parts per million. If the amount of chlorine be more than this, the evaporation should be made in vacuo over sulphuric acid. Nitrites do not interfere with the test.

The reaction is generally considered to consist in the formation of picric acid. While this is not quantitatively true, it offers the best explanation of the changes that occur.

Trinitrophenol (picric acid) is formed by the action of the nitrates in the cold, dry residue upon the phenol-disulphonic acid with which it is moistened:

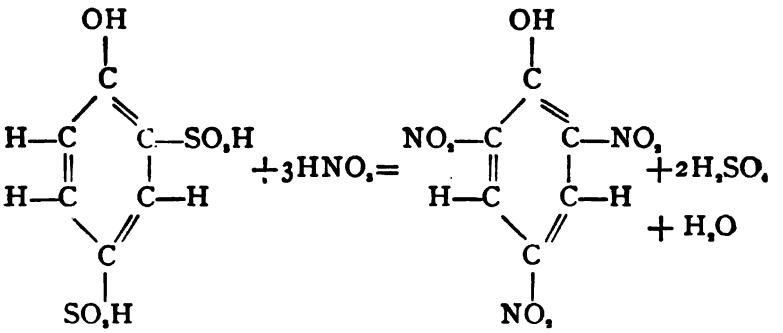

Phenol-disulphonic acid. Picric acid.

The addition of an excess of caustic alkali converts the picric acid to the alkali picrate, which imparts an intense yellow color to the liquid. The best color is obtained by the use of ammonia.

Large quantities of nitrates in colorless water may be determined by reduction to ammonia by sodium amalgam, or by any reaction which yields nitrogen, this being measured as gas.

Determination of the Carbonaceous Matter or "Oxygen Consumed."

Kubel's Hot Acid Method.

Reagents.—Ammonium oxalate 0.888 gram in one liter distilled water. One c.c. is equivalent to 0.0001 gram of oxygen. Potassium permanganate 0.4 gram in one liter distilled water, standardize against the ammonium oxalate solution and make the necessary correction. If exact, 1 c.c. is equivalent to 0.0001 gram available oxygen.

Directions.—Measure 100 c.c. of the water into a 250-c.c. flat-bottomed flask, add 10 c.c. of sulphuric acid (1:3) and about 10 c.c. of the potassium permanganate. Place the flask on wire gauze and heat it quickly to boiling. Boil the solution for exactly two minutes; remove it from the flame; let it cool one minute, and add 10 c.c. of the ammonium oxalate. Titrate

with the permanganate to a faint permanent pink color. Each c.c. of the exact permanganate used in excess of the oxalate solution used represents 0.0001 gram of oxygen consummed by the sample.

Notes.—For highly colored surface-waters 25 c.c. are taken and diluted to 100 c.c. with water free from organic matter; for sewages 10 c.c. are diluted in the same way.

The oxygen given up by the permanganate combines with the carbon of the organic matter and perhaps to a certain extent with the hydrogen, but not with the nitrogen. The amount of oxygen consumed bears some relation, therefore, to the amount of organic carbon present in the water, but this relation certainly cannot be taken as a definite one in every case, the results varying even with the time of boiling. The method has its greatest value when it is used to compare waters of the same general character and having the same origin; for example, in making periodical tests of the purity of the effluent from a filter. Furthermore, in order that the results shall have this comparative value, it is absolutely necessary that the process shall always be carried out in exactly the same way, even to the minutest detail of quantity, time, and temperature.

In some cases it may be found advantageous to heat the solution upon the water-bath for half an hour instead of boiling it for five minutes. The results, however, will not be exactly comparable with those obtained by boiling.

Different kinds of organic matter behave differently with various oxidizing agents, so that a comparison of the results obtained with different oxidizing agents may throw light upon the character of the organic matter, as well as its amount.* In waters from the watersheds of eastern North America the color and the oxygen consumed have a certain, though somewhat varying, relation.

Determination of Chlorine.—The chlorine is determined in natural waters by the method in general use;

* Woodman: *J. Am. Chem. Soc.*, **20** (*1898*), 497.

namely, titration with a solution of silver nitrate, using potassium chromate as an indicator. Since the exact change of color which constitutes the end-point will vary with the sensitiveness of the eyes of different observers to red, each person should standardize the silver nitrate solution for himself. To do this, measure into a six-inch porcelain dish 25 c.c. of distilled water; add 5 c.c. of sodium chloride solution (1 c.c. = 0.001 gram Cl) from the burette and three drops of potassium chromate solution. Titrate with the silver nitrate solution until the yellow color of the liquid assumes the faintest tinge of reddish brown.

Directions.—Waters which are high in chlorine, i.e., which contain 20 or more parts per million, are titrated directly, using 25 c.c. either with or without the addition of 5 c.c. of the salt solution. Waters which are low in chlorine are concentrated before titration, 250 c.c. being evaporated to 25 c.c. on the water-bath. Brown surface-waters should be decolorized as follows: Pour into a 750-c.c. flat-bottomed flask about 500 c.c. of the water. Add 3 c.c. of the milk of alumina; shake and heat the water quickly to boiling on an iron plate. When the liquid comes to a full boil, at once remove the flask from the plate to avoid loss by evaporation. Place it in an inclined position to allow the alumina to settle. Decant off 250 c.c. of the colorless water into a six-inch dish for concentration to 25 c.c., using a flask calibrated for both the hot and the cold solution. Before making the titration, rub down the sides of the dish above the liquid with a small quantity of distilled water free from chlorine, using a clean feather. Rinsing alone will not always dissolve the chlorides which adhere to the sides of the dish.

Notes.—For titration by this method the solution must be as nearly neutral as possible If the water is alkaline to any extent, it should be neutralized with dilute sulphuric acid,

using phenolphthalein as an indicator. The solution will then contain alkali only as bicarbonate, which does not interfere with the titration. Acid water must be made neutral by the addition of sodium carbonate.

It is important that the process be carried out essentially as described, since it has been found that the results vary with the volume of solution in which the titration is made, the amount of chromate used, and the amount of precipitated silver chloride present.* A correction for volume can be made by means of the formula given by Hazen.

E. G. Smith † recommends titration in a volume of 100 c.c., making a correction of .1 c.c. more or less as found for the error due to dilution of the reagents.

Color is removed by agitation with milk of alumina as before described.

Determination of the Residue on Evaporation and the Loss on Ignition.—*Directions.*—Ignite and weigh a platinum dish. Measure into it 100 c.c. of the water (200 c.c. in the case of surface-waters), and evaporate to dryness on the water-bath. When the water is all evaporated heat the dish in the oven at the temperature of boiling water for two hours, then let it remain in a desiccator over sulphuric acid for several hours and weigh.‡ The increase in weight gives the "total solids" or "residue on evaporation." If from a ground-water, save the residue for the determination of the iron.

In the case of surface-waters the residue should be ignited and the loss on ignition noted. Heat the dish in a "radiator," which consists of another platinum dish enough larger to allow an air-space of about half an inch between the two dishes, the inner dish being supported by a triangle of platinum wire. Over the inner dish is suspended a disk of

* Hazen: *Am. Chem. Jour.*, 11 (*1889*), 409.

† *Trans. Wis. Acad. Sciences, Arts, and Letters*, Vol. XIII. 359.

‡ In some laboratories it is the practice to dry at 110° or 130° C.

platinum-foil to radiate back the heat into the dish. The larger platinum dish is heated to bright redness by a triple gas-burner. Heat the dish in the radiator until the residue is white or nearly so. Note any blackening or charring of the residue and any peculiar " burnt odor " which may be given off. After the dish has cooled, slightly moisten the residue with a few drops of distilled water to secure weighing under the same conditions. Heat the residue in the oven for half an hour; cool in a desiccator and weigh. This gives the weight of " fixed solids," the difference being the " loss on ignition."

Notes.—Before the introduction of modern methods of water-analysis the determination of " loss on ignition " was the only method for the estimation of organic matter in water. In order, however, that the determination shall possess any real value, it is necessary to regulate carefully the heat during the ignition, so as to destroy the organic matter without decomposing calcium carbonate or volatilizing the alkali chlorides.

This is what the use of the radiator is intended to accomplish, and in the case of surface-waters, with low mineral content and considerable organic matter, the method gives generally satisfactory results. But in the case of ground-waters having little or no organic matter and high mineral content the loss is often very great on account of the decomposition of nitrates and chlorides of the alkaline earths and the loss of water of crystallization. In waters of this class the determination of " loss on ignition " is, therefore, generally meaningless, although an approximation to the amount of organic matter can be obtained by the addition of sodium carbonate to the water before evaporating to dryness. By this means the alkaline earths are precipitated as carbonates, the chlorine and nitric acid are held by an alkaline base, and there is no water of crystallization in the residue. Even with this modification the loss is considerable when magnesium salts are present, owing to the loss of carbonic acid.

The *behavior* on ignition is oftentimes significant. Swampy or peaty waters give a brownish residue on evaporation to dryness, which blackens or chars, and this black substance burns off quite slowly. The odor of the charring is like that of charring wood or grain; sometimes sweetish, but not at all offensive. Waters much polluted by sewage blacken slightly; the black particles burn off quickly and the odor is disagreeable. Any observations on this point should be recorded in the report (p. 141) under the heading " Change on Ignition."

Determination of the Hardness.

1. *By Soap.—Clark's Method.*

Directions.—Measure 50 c.c. of water into a 200-c.c. clear glass-stoppered bottle and add the soap solution from the burette, two or three tenths of a cubic centimeter at a time, shaking well after each addition, until a lather is obtained which covers the entire surface of the liquid with the bottle lying on its side, and is permanent for five minutes. The number of parts of calcium carbonate corresponding to the volume of soap solution used is found in the table in Appendix A.

This will give the total hardness. If it is desired to find the permanent hardness also, dilute 50 c.c. of the water to about 200 c.c. and boil down to 50 c.c. in a beaker, cool and determine the hardness as before. This will give the permanent hardness, and the difference will be the temporary hardness.

Notes.—When potassium or sodium soap is added to water containing calcium and magnesium salts, the soap is decomposed, and insoluble compounds with the fatty acids are formed. The importance of adding the soap *in small quantities* cannot be too strongly emphasized, especially in the presence of magnesium compounds. The presence of mag-

nesium salts will be recognized by the peculiar curdy appearance of the precipitate formed and by the occurrence of a false end-point, the lather lasting about three minutes when the titration is about half done. If much carbonic acid be liberated, it is better to follow Dr. Clark's original directions and remove it by suction.

By reference to the table it will be observed that values are not given for more than 16 c.c. of the soap solution. If in any case the water under examination requires more than 10 c.c. of the standard soap solution, a smaller portion of 25 c.c., 10 c.c. or even 2 c.c., as the case may require, is measured out and made up to a volume of 50 c.c. with recently distilled water. If the volume of soap used is always about 7 c.c., this will keep the results comparable with each other, although the element of dilution introduces an error. Potable waters, in the eastern United States, at least, are rarely so high in mineral matter as to require excessive dilution. In the case of extremely hard waters, however, the acid method is to be preferred. Distilled water itself, containing no calcium salt whatever, requires the use of a considerable quantity of soap to produce a permanent lather. The cause for this seems to exist in the dissociation of the greater part of the soap at the extreme dilution to which it is subjected, and the slow accumulation of a sufficient quantity of undissociated soap to allow of the increase of surface tension to a point at which soap-bubbles will persist.

By the *temporary* hardness of water is meant the hardness which is removed by boiling. It is due to the carbonates of calcium and magnesium held in solution by the carbonic acid in the water, probably in the form of bicarbonates. *Permanent* hardness is that which is not removed by boiling. It is caused by the presence of soluble salts of calcium and magnesium, not carbonates, but chlorides and sulphates principally, held in solution by the solvent power of the water itself.

2. *By Acid.—Hehner's Method.**

ALKALINITY.

Directions.—For the determination of the "alkalinity," measure 100 c.c. of the water into a clear bottle such, as is used for the soap test, and add 2.5 c.c. of the erythrosine indicator, 0.1 gram of the sodium salt in 1 liter of distilled water, and 5 c.c. of chloroform neutral to erythrosine. Mix well by shaking and add $\frac{N}{50}$ sulphuric acid from the burette in small quantities, shaking thoroughly after each addition. The pink color gradually grows lighter until the addition of a drop or two of the acid causes it to disappear entirely. Each tenth of a cubic centimeter of acid used represents one part of $CaCO_3$ in 1,000,000. Make a correction for the indicator by carrying out a blank determination with distilled water.

The alkalinity may be determined more quickly as follows. Measure 100 c.c. of the water to be tested into a No. 6 evaporating dish, add two drops of sensitive methyl orange and titrate with the $\frac{N}{50}$ sulphuric acid. Lacmoid and phenacetolin can also be used in the determination of the alkalinity, but they necessitate titration in a hot solution on account of their susceptibility to carbonic acid.

Notes.—This method is especially useful for waters which require clarification by alumina and subsequent filtration.

The use of chloroform is essential to secure a sharp end-point. The non-ionized erythrosine formed by the addition of the acid to its alkali salt is soluble in the aqueous solu-

---

* Hehner: *Analyst, 1883*, 8, 77; Draper, *Chem. News, 1885*, 51, 206: Ellms: *Jour. Am. Chem. Soc., 1899*, 21, 239.

tion with a slight rose color. It is, however, more soluble in the chloroform, and when it is thus removed as fast as formed the neutralization of the alkali becomes at once apparent.*

If a water contains sodium or potassium carbonate, there will not be any permanent hardness, and hence more acid will be required for the filtrate than corresponds to the amount of sodium carbonate added. From the excess the amount of sodium carbonate in the water may be determined. Any alkali carbonate present would be calculated as temporary hardness by the direct titration; hence it should be calculated to calcium carbonate and subtracted from the results found by the direct titration.

Determination of Phosphates.†—*Directions.*—Evaporate 50 c.c. of the water and 3 c.c. of nitric acid (sp. gr. 1.07) to dryness in a 3-inch porcelain dish on the water-bath. Heat the residue in an oven for two hours at the temperature of boiling water. Treat the dry residue with 50 c.c. of cold distilled water, added in several portions and poured into the comparison-tube. It is not necessary to filter the solution. Add 4 c.c. of ammonium molybdate (50 grams per liter) and 2 c.c. of nitric acid, mix the contents of the tube and compare the color, after three minutes, with standards made by diluting varying quantities of the standard phosphate solution (1 c.c. = 0.0001 gram P_2O_5) to 50 c.c. with distilled water and adding the reagents as above. Carry out a blank determination on the distilled water used for dilution, especially if it has stood for any length of time in glass vessels.

---

* Ellms: *J. Am. Chem. Soc.*, 21 (*1899*), 359.

† Lepierre: *Bull. Soc. Chim.*, 15 (*1896*), 1213 Woodman and Cayvan: *J. Am. Chem. Soc.*, 23 (*1901*), 96. Woodman: *ibid.* (*1902*), 735.

Notes.—The method as described will be sufficient for ordinary work. If a more exact determination of the phosphate is required, a slight correction should be made in each case. For a table showing these corrections reference may be made to the paper by Woodman and Cayvan previously cited.

The evaporation and heating with nitric acid is for the purpose of removing silica, which gives with ammonium molybdates a yellow color similar to that given by phosphates.

The determination of phosphates in a drinking-water is a matter which has not received the attention from water analysts that has been given to the estimation of various other constituents. Any one who looks through the literature cannot help noticing how few are the published results of quantitative estimations of the phosphate content of natural waters, apart from mineral waters. Yet this determination, by reason of the conversion of organic phosphorus compounds into phosphates through the processes of decay, is one which might reasonably be expected to throw considerable light on the question of the pollution of natural waters by objectionable material.

The reasons for this dearth of published data are not far to seek. To be of value the amount of phosphate must be known within rather narrow limits. Qualitative tests are not sufficient. The mere presence of phosphates is by no means definite or even confirmatory evidence of organic pollution. Rocks and minerals containing phosphates are found nearly everywhere, and traces, at times even considerable quantities, may be dissolved, especially by waters rich in carbonic acid. This, however, does not constitute

a serious objection to the utility of the determination. The same is true of many if not most of the constituents upon which reliance is placed in judging of the quality of a water. Unpolluted waters often contain notable amounts of nitrates and chlorides, and a true judgment can be rendered only after comparison with samples from adjacent but unpolluted sources.

The chief reason, however, has been the lack of an accurate and simple method, sufficiently delicate, and of enough data to work out a standard for comparison.

This reason can hardly hold true now, for enough work has been done on the colorimetric method to indicate its value as another link (of which we have none too many, anyway) in the chain of circumstantial evidence by which we are often compelled to judge the purity of a water.

The amount of phosphate and its variation seem to follow the same general line as the other mineral constituents which either accompany the polluting material or are produced by its decay, especially the nitrates and chlorides. It is not, however, so delicate an indicator as these. In general it may be said that the amount (expressed as P_2O_5) in an unpolluted water will seldom be over 1.0 part per million.

Determination of Iron.*—*Directions.*—Evaporate 100 or 200 c.c. of the water to dryness in a platinum dish. (The weighed residue from the determination of total solids may be used if desired.) Treat the residue with 5 c.c. of hydrochloric acid (1 : 1), being careful to carry the acid to the edge of the dish. In some cases it may be necessary to heat the dish gently on the water-bath in order to bring all the iron

* Thomson: *J. Chem. Soc.*, 67 (*1885*), 493.

into solution. When all is dissolved with the exception of silica, rinse the solution into a 100-c.c. tube and make it up to about 50 c.c. with distilled water. Add a solution of potassium permanganate drop by drop until the solution remains pink for 10 minutes.

Meanwhile prepare a blank standard with 50 c.c. of distilled water and about a cubic centimeter of hydrochloric acid. Add 15 c.c. of potassium sulphocyanide solution to the waters and to the blank standard. Add the standard iron solution, in small quantities, .02 c.c. if necessary, from a capillary pipette, mixing thoroughly by pouring the solution back and forth from one tube to another after each addition, until the color of the standard matches that of the water. One cubic centimeter of the standard iron solution is equal to 0.0001 gram of Fe.

Notes.—In the case of some river-waters it will be found necessary to add a few cubic centimeters of hydrochloric acid to the water while evaporating, in order to facilitate the solution of the iron. This should be done on a separate portion from that used for the determination of total solids.

The colors should be matched immediately after adding the sulphocyanide, since the color fades appreciably on standing. The highest standard should not contain more than 3 c.c. of the iron solution, since the color then becomes too deep for accurate comparison.

Determination of the Dissolved Oxygen.

*Method of L. W. Winkler.**

Collection of Samples.—The samples are collected in glass-stoppered bottles of known capacity, holding about

* *Berichte*, 21 (*1888*), 2843.

250 cubic centimeters. When water is taken from a faucet the bottle is filled by means of a tube which passes to the bottom of the bottle. A considerable amount of water is allowed to pass through the bottle and overflow at the top. It will be almost impossible to obtain duplicate samples unless the bottles are filled at the same time by means of a T tube, owing to variations in pressure in the pipes.

In taking samples from a stream or pond, a stopper with two holes is used. A tube passing through one of these holes is sunk in the water to the desired depth, and the other is connected with a larger bottle of at least four times the capacity of the smaller one, and fitted in the same way. From the larger bottle the air is exhausted by the lungs or by an air-pump until it is nearly filled with water. Unless the determination is to be made at once, the rubber stopper of the smaller bottle is quickly replaced by the glass stopper so that no air is left in the bottle. The temperature of the water at the time of sampling should be noted.

The apparatus which has been used in connection with work in this laboratory for collecting samples at various depths down to 75 feet is shown in outline in Fig. 11. A galvanized-iron can of such size as to hold one of the gallon bottles is weighted with lead and provided with ears at the top for suspending. The bottle, which is securely wired in, is provided with a rubber stopper carrying two brass tubes, one ending just below the stopper and projecting for about 8 or 9 inches above it, the other extending to the bottom of the bottle and connected by heavy rubber tubing with the sample bottle. This is held by brass brackets, which are fastened by means of a wooden cleat to the side of the can. The neck of the bottle is put into the slot in the upper

bracket and then it is firmly clamped by the thumb-screw of the lower one. The arrangement of tubes in the sample bottle is obvious. In using the apparatus it is quickly

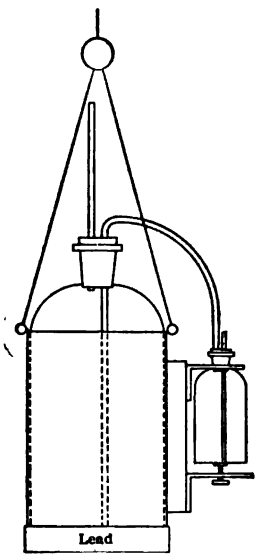

FIG. 11.

lowered to the desired depth by means of a rope marked off in feet. The water enters the sample bottle and flows through it into the other. When the bubbles cease to rise, indicating that the larger bottle is full, thus replacing the water in the sample bottle a number of times, the apparatus is drawn to the surface. The temperature is read from a thermometer fastened to the tube inside the gallon bottle.

The Determination.—Remove the stopper and add 2 c.c. of manganous sulphate solution with a pipette having a long capillary point reaching to the bottom of the bottle, and in the same way add 2 c.c. of the solution of sodium hydroxide and potassium iodide. Insert the glass stopper, leaving no bubbles of air, and mix the contents of the bottle.

Allow the precipitate to settle, and add 3 c.c. of strong hydrochloric acid with another pipette; add also one or two small glass beads and again insert the stopper. When the white portion of the precipitate is entirely dissolved, pour out a part of the solution into a flask, put back the stopper and shake the bottle vigorously. Then rinse out the contents of the bottle into the flask and titrate the liberated iodine with approximately $\frac{N}{40}$ sodium thiosulphate until the color becomes a faint yellow. Then add starch solution and titrate to the disappearance of the blue color. The first end-point should be taken, as the color will return on account of the reducing action of the organic matter present.

OXYGEN DISSOLVED.

From Report on Standard Methods.

Sulphuric Acid.—Specific gravity 1.4 (dilution 1:1).

Sodium Thiosulphate Solution.—Dissolve 6.2 grams of chemically pure recrystallized sodium thiosulphate in one liter of distilled water. This gives an $\frac{N}{40}$ solution, each c.c. of which is equivalent to .0002 gram of oxygen or .1395 c.c. of oxygen at 0° C. and 760 mm. pressure. Inasmuch as this solution is not permanent, it should be standardized occasionally against an $\frac{N}{40}$ solution of potassium bichromate as described in almost any work on volumetric analysis. The keeping qualities of the thiosulphate solution are improved by adding to each liter 5 c.c. of chloroform and 1.5 grams of ammonium carbonate before making up to the prescribed volume.

"*Calculation of Results.*—The standard method of ex-

pressing results shall be by parts per million of oxygen by weight.

"It is sometimes convenient to know the number of c.c. of the gas per liter of 0° C. temperature and 760 mm. pressure, and also to know the percentage which the amount of gas present is of the maximum amount capable of being dissolved by distilled water at the same temperature and pressure. All three methods of calculation are therefore here given:

Oxygen in parts per million

$$= \frac{0.0002N \times 1{,}000{,}000}{V} = \frac{200N}{V}.$$

Oxygen in c.c. per liter

$$= \frac{0.1395N \times 1000}{V} = \frac{139.5N}{V}.$$

Oxygen in per cent. of saturation

$$= \frac{200N \times 100}{V \times O} = \frac{20{,}000N}{VO}.$$

Where N = number of c.c. of $\frac{N}{40}$ thiosulphate solution,

V = capacity of the bottle in c.c. less the volume of the manganous sulphate and potassium iodide solution added (*i. e.*, less four c.c).

O = the amount of oxygen in parts per million in water saturated at the same temperature and pressure."

QUANTITIES OF DISSOLVED OXYGEN IN PARTS PER MILLION BY WEIGHT IN WATER SATURATED WITH AIR AT THE TEMPERATURE GIVEN.

Temp. C.	Oxygen.	Temp. C.	Oxygen.	Temp. C.	Oxygen.	Temp. C.	Oxygen.
0	14.70	8	11.86	16	9.94	24	8.51
1	14.28	9	11.58	17	9.75	25	8.35
2	13.88	10	11.31	18	9.56	26	8.19
3	13.50	11	11 05	19	9 37	27	8.03
4	13.14	12	10.80	20	9.19	28	7.88
5	12.80	13	10.57	21	9 01	29	7.74
6	12.47	14	10.35	22	8.84	30	7.60
7	12.16	15	10.14	23	8.67		

Notes.—This determination is a good illustration of an indirect volumetric process. A precipitate of manganous hydroxide is formed in the bottle by the reaction of the manganous sulphate and the sodium hydroxide. This immediately combines with the oxygen in the water to form a certain amount of *manganic* hydroxide. The hydrochloric acid which is added reacts with the manganic hydroxide to form chlorine, which in turn liberates iodine from the potassium iodide, the amount thus set free depending primarily upon the quantity of oxygen dissolved in the water. The presence of considerable amounts of organic matter or of nitrites introduces an error. In such cases the method must be modified or a correction made. Details of the method used in such cases are given in the paper by Winkler previously cited.

A correction is made for the volume of the reagents added, but since the precipitated hydroxides had settled before the acid was added, no allowance should be made for the amount of acid, since the water it displaces contains neither oxygen nor iodine.

is a constant for any particular bottle, and its logarithm may be recorded in a note-book or upon the bottle itself.

If water is collected in the ordinary way and transferred to the apparatus by pouring, there will inevitably be an absorption of oxygen unless the water is already saturated. Thus a process which gives excellent results when the water is nearly or quite saturated may fail entirely to give accurate results when the dissolved oxygen is low or absent. The water may be supersaturated with oxygen, in which case the per cent. of saturation may be more than one hundred.*

Determinations of dissolved oxygen in ponds and streams are best made on the spot, or at least the reagents should be added. The very simple apparatus required for the Winkler process can be packed in small space, and the entire determination requires only a few minutes. The absorption of the oxygen by the manganous hydroxide is complete almost at once, and it is unnecessary to allow it to settle for a long time before adding the acid. The titration can be made with a small burette or pipette with accurate results.

Determination of Free Carbonic Acid.—*Reagent.*—Standard $\frac{N}{22}$ solution of sodium carbonate. Dissolve 2.41 grams of dry sodium carbonate in one liter of distilled water which has been freed from carbonic acid by cautious addition of dilute solution of sodium carbonate. Add 5 c.c. of phenolphthalein indicator (7 grams in a liter) to the distilled water before neutralizing and measuring. Preserve this solution in bottles of resistant glass, protected from the air by tubes filled with soda lime. One c.c. equals 0.001 gram of CO_2.

* Gill: *Tech. Quart.*, 5 (*1892*), 250.

Procedure.—Measure 100 c.c. of the sample into a tall, narrow vessel, preferably a 100 c.c. Nessler tube, and titrate rapidly with the $\frac{N}{22}$ sodium carbonate solution, stirring gently until a faint but permanent pink color is produced.

The number of c.c. of $\frac{N}{22}$ sodium carbonate solution used in titrating 100 c.c. of water, multiplied by 10, gives the parts per million of free carbonic acid as CO_2.

Owing to the ease with which free carbonic acid escapes from water, particularly when present in considerable quantities, it is highly desirable that a special sample should be collected for this determination, which should preferably be made on the ground. If the analysis cannot be made on the spot, approximate results from water not high in free carbonic acid may be obtained from samples collected in bottles which are completely filled so as to leave no air space under the stopper.

Notes.—The reaction consists in the formation of acid sodium carbonate:

$$Na_2CO_3 + H_2O + CO_2 = 2NaHCO_3.$$

The acid carbonate does not give a pink color with phenolphthalein.

Determination of the Color.—The amount of color is generally determined by direct comparison of the water with some definite standard of color. Various standards of color have been proposed, the objection to most of them being that they are not sufficiently general in their application, being adapted only for the color of some particular class of waters.

Nesslerized Ammonia Standards.—The yellowish-brown tint of the surface-waters of the Atlantic watershed corresponds, except in the lowest grades, very closely to that of nesslerized ammonia, so that the standards for reading ammonia can be used also for the determination of the color. The comparison is made in the same kind of 50-c.c. tubes that are used for the ammonia determinations, but the tubes used for this purpose are kept separate from those used for the ammonia, since the least amount of alkali remaining in a tube (from imperfect washing, for instance) alters the color of the water. The scale used corresponds quite closely with the amount of the standard ammonium chloride solution in the standards. Thus a color of 1.0 is nearly the same as that produced by the nesslerization of 1 c.c. of the standard ammonia; 0.1 is about the color produced with 0.1 c.c. of the ammonia solution. In the higher grades of color, above 1.0 or 2.0, the tint varies considerably from that of the nesslerized ammonia, and the degree of color is then better determined in wider tubes and in less depth.

The degree of correspondence of the ammonia standards with the natural waters is dependent largely upon the sensitiveness of the Nessler's reagent, a solution which is so sensitive as to precipitate in two hours, matching the colors more closely than one which will remain for twenty-four hours. This is perhaps due to the reddish tinge given to the solution by the incipient precipitation of the mercuric iodide.

Natural Water Standards.—To avoid these variations in color, standards made from dark-colored water from swamps by various degrees of dilution, and verified by direct comparison with suitably prepared nesslerized ammonia stand-

ards, are used. They have the same hue as the waters to be matched, as well as a degree of turbidity which corresponds well with that of surface-waters; once prepared, they will keep for a fairly long time if protected from the light and from the dust. These are the standards that are in use in this laboratory. They are periodically standardized by comparison with the permanent glasses of a Lovibond Tintometer.

Platinum Standards.—For ground-waters which have only very little color and considerable hardness, and for filtered waters, the platinum color standards are convenient.* According to this scale, the color of a water is the amount of platinum in parts per ten thousand, which, together with enough cobalt to match the tint, must be dissolved to produce an equal color in distilled water. In practice, a standard having a color of 5.00 is prepared by dissolving 1.246 grams of potassium platinic chloride (equivalent to .5 gram platinum), 1.000 gram of cobalt chloride (equivalent to .25 gram cobalt), and 100 c.c. of strong hydrochloric acid in distilled water and diluting to one liter.

Dilute standards for use are made by diluting varying amounts of this standard to 50 c.c. with distilled water. Thus, by diluting 1 c.c., 2 c.c., and 3 c.c. to 50 c.c., colors of 0.1, 0.2, and 0.3 are obtained. It is claimed that the platinum standards are permanent if protected from the dust.

Iodine Standards.—A standard for color which could be made up at the moment when wanted and without the use of costly apparatus would be a desideratum. Experiments made in this laboratory indicate that an aqueous solution containing a definite weight of iodine offers the best solution of the problem. Owing, however, to the volatility of iodine even in dilute aqueous solution it is better to liberate it directly in

* Hazen: *Am. Chem. J.*, 14 (*1892*), 300.

the comparison-tube itself. For this the following solutions are required: Potassium iodide, 0.1 gram per liter; potassium bichromate, 0.09 gram per liter; picric acid, 0.2 gram per liter.

For a color of 5.0, 50 c.c. each of the iodide and of the bichromate solutions are used; for lower colors proportional amounts are taken and diluted to 100 c.c. with distilled water. To each tube is added 1 c.c. of the picric acid solution, and just before the colors are to be matched add 2 c.c. of strong sulphuric acid. The color develops, as in the case of nesslerized ammonia, within ten minutes and can be relied upon for about half an hour. A very slight milkiness aids in matching the color; a great hindrance to the use of metallic solutions being their clearness or brightness as compared with natural waters.

The comparison-tubes which give the most satisfactory results with colors from 5.0 to 0.5 on the natural water scale are $^{15}/_{16}$ inch wide and $9^{1}/_{4}$ inches high to the 100-c.c. mark, For lower colors, narrower tubes, $^{11}/_{16}$ inch diameter and the same depth, give closer readings.

Determination of the Odor.—*Cold.*—Shake violently the sample in one of the large collecting-bottles when it is about half or two-thirds full, then remove the stopper and quickly put the nose to the mouth of the bottle. Note the character and degree of intensity of the odor, if any. An odor can often be detected in this way which would be entirely inappreciable if the water were poured into a tumbler.

Hot.—Pour into a beaker about five inches high enough water to one-third fill it. Cover the beaker with a well-fitting watch-glass and place it on an iron plate which has been previously heated, so that the water shall quickly come to a boil. When the air-bubbles have all been driven off and the water is about to boil, take the beaker from the plate and allow it to cool for about five minutes. Then shake it with a rotary

movement, slip the watch-glass to one side and put the nose into the beaker. Note the odor as before. The odor may or may not be the same as that of the water when cold; it can be perceived, as a rule, for only an instant.

Notes.—It is inevitable that a certain personal equation should influence this test. Each laboratory will have its own standards for routine work, but a certain familiarity with the more common odors will tend to allay public anxiety and to aid in a more watchful habit on the part of consumers. Good ground-waters do not give distinct odors unless they are derived from clayey soil, but the odor often betrays a contaminated well more surely than any other test. Surface-waters will nearly always yield a characteristic odor. This odor may be due to the organic matter contained in the water, or to the presence of minute plants or animal organisms.

Among the odors which are frequently met are the "earthy," "vegetable," "musty," "mouldy," "disagreeable," and "offensive." The "earthy" odor is that of freshly turned clayey soil. "Vegetable" is the odor of many normal colored surface-waters; it may be described as swampy or marshy, pond-like, and is often strengthened by heating. "Musty" can be likened to the odor of damp straw from stables; it is fairly characteristic of sewage contamination, and by the trained observer is distinctly distinguishable from the mouldy odor. "Mouldy" is the odor of upturned garden or forest mould, or of a moist hot-house; it is somewhat allied to the earthy odor. "Disagreeable" is a term which is capable of wide variation among different observers. It may include certain characteristic odors which are peculiar to the growth or decay of certain organisms, as the "pigpen" odor of *Anabæna*, the "fishy" or "cucumber" odor of *Synura*, etc. The term "offensive" is generally reserved for the sewages. These terms can be taken only as broad illustrations of the character of the particular odor,

since the odor will very likely be described by different persons in different ways, and each laboratory will have its own characterization. The odor which often accompanies an abundant development of diatoms is a good illustration of this. It will be called by various inexperienced observers offensive, rotten, fishy, geranium-like, aromatic, in one and the same sample of water.

The terms generally used to signify the degree of intensity of the odor are "very faint," "faint," "distinct," and "decided." The exact value to be placed on each of these terms will, as a matter of course, vary with the individual analyst, but in a general way it may be said that the "very faint" odor is one that would not be detected except by the trained observer; the "faint" odor would be recognized by the ordinary consumer if his attention were called to it; the "distinct" odor is one that would be readily noticed by the average consumer, but would not interfere with the use of the water; while the "decided" odor is one which would, in all probability, render the use of the water unpleasant.

Biological Examination.—The close relation of the odor to the living fauna and flora of the water makes it desirable that the chemist shall be able to recognize the more common forms of water plants and animals even if he makes no pretensions to a knowledge of cryptogamic botany or of zoology. Therefore a microscope and a concentration apparatus should be in every water-laboratory. A full description will be found in Whipple.*

The bacteriological examination belongs to the expert rather than to the student, certainly in the present state of our knowledge of the lower organisms. It may be desirable for the student to be familiar with the simpler methods of plate and tube culture, and the water-works laboratory should, as in the above case, be provided with means for plain

* "Microscopy of Drinking-water." 2d ed. N. Y., Wiley.

number counts, and directions for avoiding errors due to variations in temperature, time of culture, etc., consult Frankland's "Micro-organisms in Water"; "Manual of Bacteriology," Muir and Ritchie; "Water Bacteriology," Prescott and Winslow.

Determination of the Turbidity and Sediment.—The suspended matter remaining in the water after it has rested quietly in the collecting-bottle for twelve hours, or more, is called its turbidity, and that which has settled to the bottom of the bottle, its sediment.

Good ground-waters are often entirely free from turbidity and sediment, the suspended matters having been filtered out during the subterranean passage of the water, but this is rarely true of surface-waters. The turbidity is various in character and amount, sometimes milky from clay or ferrous iron in solution; usually it consists of fine particles, generally living algæ or infusoria. These often collect on the side toward or from the light, and a practised eye can, not infrequently, recognize their forms. Some of the lower animal forms can also be seen by the naked eye, and the larger Entomostraca are quite noticeable in many waters.

The sediment may be earthy or flocculent; in the latter case it is generally *débris* of organic matter of various kinds. The degree of turbidity is expressed by the terms "very slight," "slight," "distinct," and "decided," and the degree of sediment by "very slight," "slight," "considerable," and "heavy." These determinations, again, are of value only to the routine worker, and for him there are various methods in use. The papers of Parmelee and Ellms * and of Whipple and Jackson † should be consulted for a description of these.

Permanent standards, however desirable for a routine laboratory where many samples are tested daily, are not very reliable for students' work where the tests are made

* *Tech. Quart.*, 12 (*1899*), 145. † *Ibid.*, 283.

only at intervals and for educational rather than technical purposes.

Determination of Alum.—On account of the use of alum or aluminum sulphate as a coagulant in the filtration of water, a determination of alumina in the effluent water is often necessary. This may be readily made by the logwood test.*

Directions.—The logwood solution is made as follows: Take two grams of logwood chips and boil one minute in a platinum dish with 50 c.c. of distilled water. Decant the solution and boil again for one minute with 50 c.c. of water. Decant this and similarly boil a third time with 50 c.c. of water. Decant this into a platinum receptacle for use. Take three drops for each test. Kept in platinum, the solution will last for several days at least.

Test the water as follows: Boil 50 c.c. of the water in a platinum dish for a short time to expel carbon dioxide. Add three drops of the logwood solution and continue boiling for a few seconds to develop the color. Decant into a glass flask and cool quickly under the tap (so as not to keep the hot solution too long in the glass). Transfer to a No. 2 beaker and blow in carbon dioxide from the breath by means of a glass tube until there is no further decolorization. Pour the water into a Nessler tube for comparison with standards similarly prepared. Allow them to stand several hours before taking the final reading. No wash-water is used at any of the decantations. The test shows one part of aluminum sulphate in 8,000,000 parts of water.

A blank made with distilled water, if not completely decolorized by the CO_2, will show a tint perceptibly fainter

* E. H. Richards: *Tech. Quart.*, 4 (*1891*), 194. A. H. Low, *Tech. Quart.*, 15 (*1902*), 351.

than that produced by one part in 8,000,000 of aluminum sulphate.

It should be noted that carbon dioxide must be kept absent until the point prescribed. The solution is therefore transferred to a beaker in order to keep the flask free from carbon dioxide for the next test.

The main points are:

1. Any kind of logwood appears to answer.

2. The solution is good for several days, at least, if kept in platinum.

3. The use of platinum instead of glass for boiling the test.

4. The use of carbon dioxide instead of acetic acid.

Aluminum hydrate, as pointed out by the late Professor A. R. Leeds in 1893, will produce a tint almost as strong as if it were in solution, but of a distinctly differing tint.

Mr. Low's method of procedure is as follows: First, test the water as above described. If no tint, or none exceeding that of the blank, remains after standing several hours or over night, that is sufficient. If, however, a tint persists, or a colored precipitate settles out, it is necessary to determine if this is due to aluminum hydrate. Pour a sample of the water several times through a double Swedish filter, and finally test the filtrate. If the tint produced is weaker than that given by the unfiltered water, repeat the operation on a fresh portion of the water, using the same filter, and continue repeating with new portions of the water and always using the same filter, until it is apparent that no further diminution of the tint can be effected.

For a less delicate test in school laboratories where platinum is not available, the following alternative method may be used:

Dissolve about 0.1 gram pure hæmatoxylin in 25 c.c. water; this solution will keep for two weeks and works best

after being made several hours. To 50 c.c. of the water, placed in a four-inch porcelain dish, add two drops of the hæmatoxylin solution, allow the solution to stand for one or two minutes, then add a drop of 20 per cent. acetic acid. The standards are prepared at the same time, using 50 c.c. of distilled water and the required amount of a standard alum solution. The comparison must be made immediately, since the color fades on standing. In this way the presence of one part of aluminum sulphate in five million can be determined directly in the water and with ease.

Logwood may be used instead of the hæmatoxylin, the solution being prepared as above.

Notes.—This test will show the presence of all soluble salts of aluminum which enter into combination with the coloring matter of the logwood to form a "lake."

The alkalies and alkaline earths give a purplish color with logwood extract, hence the test for alum can be made only in acid solution.

Determination of Lead.—Lead in the minute quantities in which it ordinarily occurs in water is best estimated by comparing the color of the sulphide with standards.

Directions.—If the water is colorless, acidify the clear solution, concentrated if need be, with two or three drops of acetic acid, and pass in hydrogen sulphide to saturation. If a color is produced, compare it in a 100-c.c. tube with the color given by varying quantities of a standard lead solution.

If the water is too highly colored to estimate the lead directly, evaporate three or four liters in a porcelain dish to about 25 c.c., add 10 c.c. of ammonium chloride solution and a considerable excess of strong ammonia. Then add hydrogen sulphide water and allow the dish to stand some hours. Boil the contents of the dish for a few moments to expel the

excess of hydrogen sulphide, and filter. The precipitate contains all the lead, iron, and suspended organic matter, also copper and zinc if present, while the soluble color goes into the filtrate. Wash once with hot water, transfer the filter to the original dish, and dissolve the sulphides by boiling with dilute nitric acid (1 part acid, sp. gr. 1.2, to 5 parts water). Filter and wash; evaporate to 10–15 c.c., cool, add 5 c.c. concentrated sulphuric acid and evaporate until copious fumes are given off. Then, if the original water contained less than 0.25 part iron per million, add acetic acid and ammonia, boil, filter, and read the amount of lead in the alkaline filtrate, making the standards (page 260) also alkaline with ammonia.

If the water contained over .25 part iron, wash the lead sulphate into a beaker with alcohol and water, and let it settle overnight. Filter, wash free from iron with 50 per cent. alcohol, dissolve the precipitate by boiling with ammonium acetate, filter, and determine the lead as above.

Note.—If more than .25 part of iron is present, some of the lead will be held by the precipitated ferric hydroxide; and if 25 parts are present, all of the lead may be lost in this way; hence the modification of the method in the presence of considerable quantities of iron.*

When copper is also present it is detected by the blue color given to the ammoniacal filtrate from the iron precipitation.

Statement of Results.—In reporting water analyses the results are best expressed in milligrams per liter, which for the majority of waters is equivalent to "parts per million." Occasionally it may be desirable to express the results in "grains per gallon." Parts per million may be converted into grains per U. S. gallon by multiplying by 0.058. For con-

* Ann. Rep. State Bd. Health, Mass., 1898, 577.

venience the results should be arranged in tabular form, such an arrangement being suggested below:

SANITARY WATER-ANALYSIS.

(Parts per 1,000,000.)

No.	Date.	Physical.					Residue on Evaporation.			
		Color.	Turb.	Sed.	Odor.		Total.	Loss.	Fixed.	Change on Ignition.
					Cold.	Hot.				
121	3-9-'00	.50	Dec.	Cons.	None	F. Veg.	42.5	12.5	30.0	Slight black
122	"	0.0	None	None	"	None	64.0	.....	.....	.....
123	"	0.0	"	"	"	"	9740.0	.....	.....	.....

No.	Nitrogen as							Ox. Cons.
	Total Organic.	Alb. Ammonia.			Free Am.	Nitrite.	Nitrate.	
		Total.	Sol.	Susp.				
121	.598	.306	.170	.136	.056	.003	.220	4.83
122	.....	.014	.....	.....	.000	.000	1.40	.41
123	.....	.032	.....	.....	.560	.003	1.14	3.23

No.	Hardness	Chlorine as Chlorides.	Iron.	Biological (per c.c.)				
				Bac.	Plants.			Animals.
					Diatoms.	Cyanophyceæ.	Algæ.	
121	20.0	1.8	.....	.....	1	0	0	229
122	23.0	6.3	.01	.....	.....	.....	.....	.....
123	560.0	1198.0	.46	.....	.....	.....	.....	.....

No. 121 is from a pond; 122 from a spring; 123 from an artesian well.

CHAPTER VIII.

FOOD IN RELATION TO HUMAN LIFE: COMPOSITION, SOURCES, DIETARIES.

LIFE itself is conditioned on the food-supply. Wholesome food is a necessity for productive life. Man can and does exist on very unsuitable, even more or less poisonous, food, but it is merely *existence* and not effective life. This is true not only of the wage-earner, but of the business-man, the professional man, the scholar. To be well, to be able to do a day's work, is man's birthright. Nevertheless a too large proportion of the American people sells this most valuable possession for a mess of pottage which pleases the palate for three minutes and weights the digestive organs for three hours. With the products of the world exposed in our markets, the restraints of a restricted choice, as well as inherited instincts or traditions, lose their force. The buyer, unless he has actual knowledge to guide him, is swayed by the caprices of the moment or the condition of his purse, and often fails to secure adequate return in nutritive value for the money paid. The fact that so much *manipulated* material is put upon the market renders this choice of food doubly difficult, since the appearance of the original article is often entirely lost, and to city-bred buyers even the natural product conveys little idea of its money value. It is now even more necessary that an elementary knowledge of the proximate composition and food value of the more common edible substances should be recognized as an essential part of education.

Food: Definition and Uses.—Food is that which builds up the body and furnishes energy for its activities: that which brings within reach of the living cells which form the tissues the elements which they need for life and growth. Only such available substances can be called food, no matter what their chemical composition may be. Soft coal contains carbon and hydrogen and is food for the furnace, but is not available for the animal body.

This food which is taken into the body is used in various ways. It forms and builds up new tissues, besides repairing and making good the waste of tissues due to bodily activity; it is stored up in the body to meet a future demand; it supplies the needed heat by the transformation of its stored up or potential energy into the muscular energy required by the body; it may be used to protect the tissues of the body from being themselves consumed as food.

Composition of Food.—We determine what chemical elements enter into the composition of the body by an analysis of the various organs and tissues. We learn what combinations of these elements serve as food by determining those present in mother's milk and in foodstuffs which experience has proved to furnish perfect nutrition. From these studies it is apparent that about fifteen chemical elements are constant constituents of the human body; that about a thousand natural products are known to have food value; that of these, one hundred are of world-wide importance (see table, page 150), and that ten of them form nine-tenths of the food of the world.

The composition of food, as shown by chemical analysis, is not, however, the only factor that must be known to determine its value. The digestibility of the material must be taken into account as well. "We live not upon what we eat, but upon what we digest." It is more important to know the amount of *available nutrients* than the amount of total nutrients.

Food Principles.—While the foodstuffs present great variety, the food principles may be grouped under four headings;

viz., nitrogenous substances or proteids, fats, carbohydrates, and mineral salts. Each group contains many members with minor but often essential differences. To make these substances available, there is needed an ample supply of air and of water,—of water for solution and circulation, of air for the oxygen needed to liberate the stored energy of the food in the place where it will accomplish its purpose.

Nitrogenous Substances.—Since, in some way as yet unknown to us, nitrogen is essential to living matter, such substances as contain this element in an available form are of the first importance. Some, as albumen, are so closely allied to human protoplasm that probably they need only to be dissolved to be at once assimilated. Others, as gluten and similar vegetable products, undergo a greater change; while still others, as gelatine, have a less profound but marked effect in protecting the tissues from waste.

The enzymes, " ferments," in part, of the older nomenclature, are also highly nitrogenous substances present in some form in nearly all foodstuffs of natural origin. The nearer the composition of the food approaches that of the protoplasmic proteid, presumably the greater its food value, since each cleavage, each hydrolysis, each step in the breaking down of the highly complex molecule, consisting of hundreds of atoms, is supposed to liberate the stored energy. Therefore it is not a matter of indifference in what form this essential is taken. So little is known, however, with scientific accuracy that students will find a fruitful field of research along these lines of investigation. Also together with this element, nitrogen, go others, in small quantity to be sure, but evidently of great value. Such are sulphur, iron, phosphorus. One difference between the several groups of proteids is seen in this combination with the metallic elements which seems to carry with it certain effects. Until greater progress has been made in

determining the availability in the organism of the various known substances, we must be content with a wide margin in the calculated quantities necessary for the daily efficiency, except in the very few instances of nearly pure substances, as white of egg. It is evident also that the manner of preparation and the kind of mixtures used in food will affect most profoundly so unstable and complex a class of substances. One thing is certain, that the body cannot take nitrogen from that which does not contain it. Therefore a certain quantity of highly nitrogenous food should form a portion of the daily supply. It is usually held that the body seems to be sufficiently nourished when the food contains an amount of digestible proteid equivalent to about 100 grams of dry albumen per day for the average adult, although recent work has shown that this figure is probably too high. An excess appears to have a stimulating effect and overloads the system with the waste, since the end-products are not purely mineralized substances, as are carbon dioxide and water from the carbohydrates, but are compounds of an organic nature, as creatin, urea, and uric acid, which have deleterious effects when accumulated in the system. A deficiency of nitrogen is made good, to a limited extent, by the protective agency of the other foodstuffs which offer themselves for all the offices except the final one of tissue-building.

Fats.—For this protective action, as well as for many other purposes, the fats are most valuable, and if they occur in about the same proportion as do the nitrogenous elements, the needs of the organism seem to be well met. Thus, in mother's milk, in eggs, and in meat from active animals these two are in nearly equal proportions, while in the cereals the fat is less; in nuts and in meat from fattened animals, as a rule, it is higher than the nitrogen. Little is known as to the varying food value of these fats from different sources. Certain

physical conditions of solidity, melting-point, etc., seem to have more influence than mere chemical composition. Whatever the source, it is certain that the stored-up energy which is to serve the organism in cases of loss of income from any cause is in the form of fat, a form which is not subject to the action of agents which so readily decompose proteids and carbohydrates and yet is readily converted into available food whenever called for. That it is not absolutely necessary that the food should contain fat as such seems to be proved by experiment, but from the fact that all nearly natural food-substances do contain it, and that it appears to be more economical of human energy to take it from these foods than to manufacture it from the proteids and carbohydrates, we may safely assume fat to be an essential of the human dietary.

That the equality in amount of fat with nitrogenous compounds is not essential is proved by the fact that the strong draft animals, as horses and oxen, take food in which the per cent. of fat is not more than half as much as of proteid; nevertheless it is present in the food of all animals and doubtless, in its turn, is protected by an excess of the third class of foodstuffs, the carbohydrates, characteristic of the vegetable kingdom—a class which in the final decomposition yield clean volatile products, water and carbon dioxide, and which, therefore, do not clog the system so readily as do urea and other wastes.

Carbohydrates.—The number of more or less well-defined substances under this head is legion: starches from scores of plants, sugars from as many more, gums, pectins, and dextrins, all with a certain food value, dependent probably upon the utilization of the various mixtures with which they are taken into the alimentary canal. These foodstuffs are very liable to "fermentation," that is, to an acid decomposition which prevents their absorption by

the delicate lining of the walls of the intestines and which causes digestive disturbance. The sugars, which are very soluble, and therefore liable to be present in excess, are especially subject to this change. This class of food-substances is found in the diet of civilized man, free to choose, in an amount about equal to the sum of the other two classes, with a tendency to less rather than more. It may be said that sugar and fat increase over starch in the diet of a people of unrestricted choice, but it is not certain that the qualities of body which make for hardihood and resistance to disease are correspondingly increased. There is, indeed, much evidence to show that power of digesting vegetable foods indicates a general well-being of body conducive to long life. A ready adaptation renders possible the changes of habitat required by civilization. Unless one is to be confined to a narrow range it is wise to cultivate a strength of digestion as well as a strength of muscle, and for the best brain power we believe it to be more essential.

Mineral Salts.—The fourth class, mineral salts, comes into the food largely from the vegetable substances eaten, for in these the union is an organic one readily assimilated. As we have seen, certain elements go with the nitrogenous portion, as, for example, in gluten and its congeners are found sulphur and phosphorus. Potassium, found in barley, is a constant constituent of protoplasm, while sodium is found in blood-serum. A lack of vegetable foods seems to impoverish the blood-corpuscles. For children, a deficiency in lime causes serious disease. Sugar, olive-oil, corn-starch, and other prepared food-substances cannot take the place of asparagus, cabbage, carrots, etc.

To sum up briefly, then, we may say that the *protein* or nitrogenous portion of the food forms tissue, such as muscle, sinew and fat, and furnishes energy in the form of heat and muscular strength;

the *fats* build up fatty tissue, but not muscle, and supply heat; the *carbohydrates* are changed into fat and supply heat. Another important use of the nutrients is to protect each other from being used in the body. The carbohydrates, especially, in this way protect the protein, including muscle, etc., from consumption.

Change in Composition Due to Cooking.—The composition of cooked food is in general not the same as the raw material on account principally of chemical and physical changes brought about by the heat employed in the cooking process. The total nutrients, calculated on a water-free basis, may be practically the same, but the structure is often quite different.

Starch is hydrolyzed and rendered soluble by heating in the presence of moisture, and at higher temperatures it may be converted into the brown, soluble dextrin. The sugars are changed, being, in the case of sucrose, partly converted into other forms, such as invert sugar, by the heating, with the help of the organic acids present in many foods. Some of the proteids tend to become less soluble through heating and at higher temperatures may be even partly decomposed with possible loss of food value.

Heat of Combustion.—Until a more definite knowledge of the processes of metabolism (the transformations of matter and energy in the animal organism) is obtained the potential energy of food is calculated in terms of mechanical work—expressed in heat-units or calories.

One calorie is the amount of heat required to raise the temperature of one gram of water one degree centigrade. A gram of fat, as actually digested and oxidized in the body, affords enough heat to raise the temperature of about 9000 grams of water one degree. In like manner a gram of protein has an energy-producing power expressed in calories of about 4000, and for carbohydrates the average value is also 4000.

Allowance is made in these figures for the fact that to digest completely any part of our food results in a decrease of the amount of

energy to be derived from it, and this affects the protein more than it does the other two. It is probably true that under favorable conditions the fat and carbohydrates can be completely utilized in the body and consequently their energy-producing power can be correctly estimated from their heat-producing power outside the body. In the case of protein, however, the digestion within the body is never so complete as to furnish all the energy that would be obtained by a complete combustion of these nitrogenous materials outside of the body.

The fact remains, however, that all experiments yet made go to show that within practical limits we are safe in using the heat of combustion (expressed in calories) of any food-substance at a controlling measure of food values.

Nutritive Ratio.—The requisite number of calories must, however, be obtained by the utilization of such substances as contain all the elements needed by the body, and in such ratio as has been found available for the balance of nutrition. In carrying on its multifarious activities the body loses about 20 grams of nitrogen per day, which must be replaced by the same element in the food taken. Thus while the requisite number of calories may be furnished by fat or starch, these substances alone will not suffice for complete nutrition. The nutritive ratio, or the proportion of nitrogeneous to non-nitrogenous food, must be maintained in the proportion of 1 to 3, or at least 1 to 5.

The following table of one hundred common food-materials is arranged in the order of calorific or energy-giving power, but in considering the food value of any one substance its nitrogen content must also be considered, and such combinations made as will yield the requisite elements for a well-balanced ration.

From even a cursory examination of the table it will be seen how widely some of the foodstuffs differ under differing conditions of soil moisture, fertilization in the case of plants,

COMPOSITION OF SOME COMMON FOOD-MATERIALS AS PURCHASED.

I. Fuel Value 3000–4000 Calories* per Pound.

Food-material.	Refuse.	Water.	Nitrogenous Substances.	Fat.	Carbohydrates.
	Per cent.	Per cent.	Per cent.	Per cent.	Per cent.
Butter		11.0	1.0	85.0	
Lard (refined)				100.00	
Oleomargarine		9.5	1.2	83.0	
Salt fat pork		0.3 to 12.2	0.2 to 5.0	80.3 to 94.1	
Suet		4.3 to 21.9	1.1 to 7.5	70.7 to 94.5	
Walnuts (shelled)		2.5	16.6	63.4	16.1

II. Fuel Value 2000–3000 Calories per Pound.

Bacon	8.7	18.4	9.5	59.4	
Cheese (American pale)		31.6	28.8	35.9	0.3
Chocolate		1.5 to 10.3	12.5 to 13.4	47.1 to 50.2	26.8 to 33.8
Doughnuts		11.0 to 25.8	5.1 to 7.6	16.4 to 25.7	45.8 to 63.2
Mutton flank (fat)		28.9	10.7	59.8	
Peanut butter		2.1	29.3	46.5	17.1
Sausage (farmer)	3.9	22.2	27.9	40.4	

III. Fuel Value 1500–2000 Calories per Pound.

Barley (pearled)		9.8 to 12.9	7.0 to 10.1	0.7 to 1.5	77.3 to 78.1*
Beans (dried)		9.6 to 15.5	19.9 to 26.6	1.4 to 3.1	57.2 to 63.5*
Cake average (except fruit)		19.9	6.3	9.0	63.3
Candy		4.0			96.0
Cheese (Neuchatel)		42.7 to 57.2	25.1 to 22.3	22.3 to 32.5	0.2 to 2.9
Corn-meal		8.8 to 17.9	6.7 to 11.6	1.0 to 5.3	68.4 to 80.6*
Corn-starch		10.0			90.0*
Crackers (average)		6.8	10.7	8.8	71.9*
Fat meats	11.7	38.3	13.0	36.8	
Gelatin		13.6	84.2	0.1	
Ham (smoked, medium fat)	4.5 to 28.4	27.3 to 42.5	10.2 to 21.9	24.5 to 39.9	
Infants' and invalids' foods		2.4 to 12.3	2.0 to 22.5	0.3 to 10.9	66.9 to 89.4
Macaroni		7.0 to 12.3	7.9 to 16.6	0.0 to 4.9	67.2 to 78.4*
Oats		7.8	16.5	7.3	66.5*
Peanuts	24.5	6.9	19.5	29.1	18.5
Peas (dried)		6.9 to 15.0	20.4 to 28.0	0.8 to 1.3	58.0 to 67.4*
Pop-corn		4.3	10.7	5.0	78.7
Rice		9.1 to 14.0	5.9 to 11.3	0.1 to 0.7	75.4 to 81.9*
Rye flour		11.9 to 13.6	4.9 to 8.8	0.2 to 1.3	77.6 to 80.2*
Sugar (granulated)					100
Wheat (entire) flour		6.4 to 13.1	12.2 to 14.6	1.5 to 2.1	69.5 to 77.0*
Wheat flour (white bakers')		10.1 to 13.3	10.3 to 14.9	1.9 to 2.0	70.3 to 75.5
Wheat (shredded)		7.2 to 10.7	9.6 to 11.4	1.3 to 1.6	75.0 to 79.7*
Zwieback		5.0 to 7.7	8.6 to 11.7	8.1 to 11.3	72.1 to 74.2

* Including fibre.

IV. Fuel Value 1000–1500 Calories per Pound.

Apples (dried)		8.6 to 47.4	1.2 to 2.5	0.1 to 5.0	48.6 to 86.9†
Bread (white)		35.3	9.2	1.3	53.1
Corn-bread		28.4 to 48.0	6.5 to 10.1	2.3 to 9.8	40.3 to 54.3
Dates	10.0	13.8	1.9	2.5	70.6
Figs		11.6 to 25.0	2.6 to 5.7	0.3	68.3 to 83.1
Fresh pork (ribs and shoulder)	15.9 to 20.3	40.1 to 43.6	13.7 to 14.5	25.4 to 25.6	
Medium fat mutton and beef	14.4 to 27.8	38.0 to 44.9	11.4 to 12.9	19.8 to 31.2	
Mince-meat (commercial)		27.7	6.7	1.4	60.2
Mince-meat (home-made)		54.4	4.8	6.7	32.1
Pies		44.9	4.4	9.4	39.2
Prunes (dried)	15.0	19.0	1.8		62.2
Raisins	10.0	13.1	2.3	3.0	68.5
Sandwiches		44.9	10.9	9.0	33.3
Sardines (canned)	5.0	53.6	23.7	12.1	
Salt mackerel	22.9	32.5	16.3	17.4	

† One Calorie equals 1000 calories.

COMPOSITION OF SOME COMMON FOOD MATERIALS.—*Continued.*

V. FUEL VALUE 500–1000 CALORIES PER POUND.

Food-material.	Refuse.	Water.	Nitrogenous Substances.	Fat.	Carbohydrates.
	Per cent.	Per cent.	Per cent.	Per cent.	Per cent.
Beef (round)	8.5	62.5	19.2	9.2	.....
Beef (sirloin steak)	12.8	54.0	16.5	16.1	.....
Chicken (fowls)	18.0 to 42.7	38 3 to 53.7	11.5 to 16.0	6.9 to 21.5	.....
Cream	.....	74.0	2.5	18.5	4.5
Eggs	11.2	65.5	11.9	9.3	.....
Herring (smoked)	44.4	19.2	20.5	8.8	.....
Meats (lean)	0.5 to 11.3	59.9 to 69.2	18.1 to 21.4	7.8 to 14.2	.....
Olives	19.0	52.4	1.4	21.0	3.5
Salmon (fresh)	23.8 to 35.1	45.0 to 51.2	12.6 to 15.0	6.6 to 9.5	.....
Salmon (canned)	11.7 to 16 9	54.6 to 58.2	18.6 to 20.2	5.6 to 9.8	.....
Tapioca pudding	.....	52.0 to 71.6	2.8 to 4.2	2.3 to 4.8	21.9 to 38.1
Tongue (beef)	9.2 to 55.3	32.4 to 69.2	7.8 to 20.2	0.7 to 15.3	.....
Turkey	17.1 to 32.4	41.1 to 44.7	15.8 to 16.8	5.9 to 25.5	.....
Veal (breast)	15.7 to 25.4	48.5 to 55.7	14.2 to 16.9	9.4 to 12.8	.....

VI. FUEL VALUE 400–500 CALORIES PER POUND.

Beans (canned red kidney)	.....	72.7	7.0	0.2	18.5
Calf's-foot jelly	.....	77 6	4.3	.....	17.4
Salt cod (boneless)	1.6	54.8	27.7	0.3	.....
Succotash (canned)	.....	71.4 to 79.9	2.9 to 4.4	0.7 to 1.7	14.9 to 22.4
Sweet potatoes	20.0	55.2	1.4	0.6	21.9

VII. FUEL VALUE 300–400 CALORIES PER POUND.

Bananas	31.0	48.9	0 8	0.4	14.3
Butter beans	50.0	29.4	4.7	0.3	14.6
Fish (fresh)	25.2 to 46.0	46.1 to 49.1	11.9 to 12.0	1.8 to 5.9	.....
Grapes	25.0	58.0	1.0	1.2	14.4
Hash	.....	80.3	6.0	1.9	9.4
Milk	.....	87.0	3.3	4.0	5.0
Potatoes	20.0	62.6	1.8	0.1	14.7

VIII. FUEL VALUE 200–300 CALORIES PER POUND.

Apples	25.0	63.3	0.3	0.3	10.8
Chicken (broilers)	31.4 to 55.1	44.6 to 52.4	9.0 to 15.7	1.1 to 1.8	.....
Cranberries	.....	87.6 to 89.5	0.4 to 0.5	0.4 to 0.9	9.3 to 10.9
Onions	10.0	78.9	1.4	0.3	8.9
Oysters (solid)	.....	82.2 to 92.4	4.5 to 7.3	0.5 to 1.8	1.5 to 6.2
Parsnips	20.0	66.4	1.3	0.4	10.8
Pears	10.0	76.0	0.5	0.4	12.7

IX. FUEL VALUE 100–300 CALORIES PER POUND.

Beets	20 0	73.0	1.3	0.1	7.7
Cabbage	15.0	77 7	1.4	0 2	4.8
Carrots	20.0	70.6	0.9	0.2	7.4
Green corn	61.0	29.4	1.2	0.4	7.7
Lemons	30.0	62.5	0.7	0.5	5 9
Oranges	27.0	63.4	0.6	0.1	8.5
Soups (canned)	.....	91.0 to 92.8	2.9 to 5.0	0.2 to 0.8	0.6 to 5.7
Spinach	.....	91.6 to 92.8	1.8 to 2.4	0.2 to 0.5	3.1 to 3.4
Squash	50.0	44.2	0 7	0.2	4.5
Tomatoes (canned)	.....	92.5 to 97.9	0.3 to 1.7	0.1 to 0.3	1.4 to 8.1

X. FUEL VALUE 10–100 CALORIES PER POUND.

Asparagus	.....	94.0	1.8	0.2	3.3
Bouillon (canned)	.....	96.5 to 96.7	1.7 to 2.6	0.0 to 0.2	0.7 to 0.3
Celery	20.0	75.6	0.9	0.1	2.6
Cucumbers	15.0	81.1	0.7	0.2	2.6
Watermelons	59.4	37.5	0.2	0.1	2 7

and of fatness or leanness in animals, of method of preparation or of combination in cooked foods.

Therefore examinations of materials are imperative if there is to be any basis of calculation. In an institution where, for instance, flour forms two-thirds of the daily ration, if it contains the lowest per cent. of nitrogen it may not furnish sufficient proteid for a well-balanced ration, or if the meat used is very lean there may not be fat enough for the best nutrition.

The great variation in the proportion of water leads to many surprises, and the amount of unedible material is to be considered. The uneducated provider buys oysters under the impression that he is furnishing food of high value, and does not distinguish between potatoes and rice.

In the present state of our knowledge, the best use to which we can put such tables and analyses is as a check against gross errors of diet, which are found with alarming frequency especially among children and students, those who can least afford to make them. References will be found in the Bibliography to works for further study along these lines.

Dietaries.—A dietary is simply a known amount of food of known composition per person per day, week, or month.

What is called a standard dietary is such a combination of food-materials as shall furnish the amounts held to be necessary. The following are examples of such standard dietaries:

Approximate Amounts required daily by	Nitrogenous, grams.	Fats, grams.	Carbohydrates, grams.	Calories.
Child of 6–9	62	45	200	1593
Child of 9–14	78	45	281	1890
Adult at rest	100	75	380	2665
Adult at moderate work	100	90	450	3092
Adult at hard work...	125	125	500	3725

(In feeding experiments from 10 to 20 per cent. more must be allowed for waste and indigestibility.)

From the table on p. 150 may be selected such food as will give the required quantities in variety enough to suit any taste. That which the table cannot give is the per cent. of each which, under any given condition, will be utilized by the person fed. The strength of the digestive juices, exercise, fresh air, the cooking, the mixing of the foods, the habits of mind as to food, the customs of the family, all influence this utilization, so that other means must be resorted to in order to gain an idea of what is practicable. This is done by taking account of the food of persons free to choose ; of those in different countries, in different circumstances, and using a great variety of materials. Since Voit made his standard dietary in 1870, many hundreds, at least, have been so gathered in the United States alone—more than two hundred since 1886. All the information thus gained goes to confirm the theoretical standard, and also to show how much depends upon suitable preparation and combination. These last two things help each other.

As food is ordinarily prepared, about 10 per cent. must be deducted for indigestibility in a customary mixed diet, and about 10 per cent. more for the refuse or waste of food as purchased, so that of the total pounds of meat, vegetables, and groceries some 20 per cent. is of no final service in the body. It is immaterial whether this amount is subtracted from the final calculation or whether the higher figures be taken, that is, whether 125 grams of proteid as purchased or 100 grams final utility is used. There will be an unknown limit in either case. According to late experiments 100 grams of proteid is high. The waste of fats is less in proportion as the dietary is a restricted one.

Knowledge of Food Values Necessary.—The most serious aspect of the food question is that the taking of it is voluntary, not, like air, a necessity beyond control, and that the

most fantastic ideas are allowed to rule. The day-laborer is in little danger, since his food demand is made strong by out-of-door exercise; but the student who shuts himself up in hot, close rooms, and who does not look upon food as his capital, but only as a disagreeable task or an amusement, is in great danger, as is he who, having heard that one can live on a few cents a day, proceeds to try it without knowledge, and suffers a loss of efficiency for years or for all his life.

It is not nearly so difficult to acquire a working knowledge of food values as of whist or golf, so that on entering a restaurant a suitable menu may be made up within one's allowance. It is only necessary to correct prevailing impressions and reinforce one's experience.

Figs, dates, raisins, and prunes are apt to be regarded as luxuries instead of as rich food-substances of a most digestible kind when freed from skin and seed. Nuts are a much neglected form of wholesome food, admirably suited to a winter table from their richness in fat, and also furnishing muscular energy, as is seen in the agile squirrel, and is proved by many human examples. With nuts, however, must be taken fruits or other bulky foods, to balance the concentration. The somewhat compact and oily substance must be finely divided and freed from its astringent skin.

In distinction from these rich foodstuffs, we find oranges, apples, etc.; the usual garden vegetables, asparagus, lettuce, etc., which, while they fill an important place in the dietary, add little directly to the energy of the body and need not be considered except as, by their flavor or æsthetic stimulus, they add to the efficiency of the rest.

The foods which furnish the greatest nutrition for the least money are such materials as corn meal, wheat flour, milk, beans, cheese and sugar. The expensive cuts of meat, high-priced breakfast cereals and the like, add but little to the

nutritive value but greatly increase the cost of living. A meal of lettuce dressed with oil, eaten with bread and cheese, fulfils all the requirements of nutrition, and may cost five cents. The same food value from sweet breads, grape-fruit, etc., might cost a dollar. Incorrect ideas in regard to food values, and prejudice inherited or acquired against certain foods, have too often resulted in excluding wholesome and nutritious articles from the dietary and decreasing thereby the efficiency of the human machine.

CHAPTER IX.

THE PROBLEM OF SAFE FOOD. ADULTERATION AND SOPHISTICATION.

ADULTERATION grows largely, if not almost entirely, from excessive competition. Nearly every article of common food has been found at one time or another to be adulterated, yet manufacturers testify that they willingly would stop this addition of foreign material if they could be sure that their competitors would stop also. Other causes there are also: the demand for goods out of season; for perishable products which must come many miles; the failure of the supply of a given substance to meet a continuing demand; all of these lead to adulteration, imitation and substitution.

To many people otherwise intelligent, the term *adulterated* food is synonymous with *poisoned* food. With others, thanks to alarming newspaper articles, not wholly disinterested, the general impression is far beyond the reality. It is not necessary to use poisonous or even deleterious material: it needs only to mix with the food material some substance cheaper but harmless, to make some change in the outward appearance of the article so that people shall not recognize the familiar substance, and then to herald far and wide the discovery of a new process by which the food value is greatly enhanced. "Things are not what they seem" is nowhere more true than in the case of foods.

Definition of Adulteration.—To adulterate is "to *debase*," "to make impure by an admixture of baser materials." The word "adulterated refers to any food to which any foreign substance, not a proper portion of the food, has been added. It does not

matter whether the added material is of greater value than the food itself. The addition of coffee to cereal or substitute coffees, is properly held to be an adulteration. Deterioration should not be mistaken for adulteration. People who are not wholly familiar with the appearance of a food or the chemical and physical changes which it may undergo, think that if it does not taste just right or look just right that it must be adulterated. Appearance has slight relation to the purity of the article in these days of paint, polish and powder.

Some forms of adulteration are more properly described under the head of *misbranding*, that is, referring to foods incorrectly described by the label. While the significance is not exactly the same as that of the word adulterated, yet the two may sometimes be applied to the same product. For instance, the addition of starch to sausage to conceal the use of excessive amounts of water and of fat constitutes an adulteration, which would not be the case if the article were properly branded to show the presence of the added "filler."

To adulterate the coin of the realm or the liquor of the bar with a baser metal or an imitation whisky is a heinous offence. So is the mixture of milk with the baser article, water, which thereby lowers its food value. But the "wretched sophistry" which obscures the nature of things on a package of prepared food misleads more persons and inflicts more injury upon the community than the other, yet goes unrebuked. The most barefaced assertions are printed in magazines, and "pure-food shows" only whet the appetite for something new.

Legal Definition of Adulteration and Misbranding.—In the Federal Pure Food Law, commonly known as the Food and Drugs Act of June 30, 1906, adulteration and misbranding are thus defined:

SEC. 7. That for the purposes of this Act an article shall be deemed to be adulterated:

In the case of food:

First. If any substance has been mixed and packed with it so as to reduce or lower or injuriously affect its quality or strength.

Second. If any substance has been substituted wholly or in part for the article.

Third. If any valuable constituent of the article has been wholly or in part abstracted.

Fourth. If it be mixed, colored, powdered, coated, or stained in a manner whereby damage or inferiority is concealed.

Fifth. If it contains any added poisonous or other added deleterious ingredient which may render such article injurious to health: *Provided*, That when in the preparation of food products for shipment they are preserved by any external application applied in such manner that the preservative is necessarily removed mechanically, or by maceration in water, or otherwise, and directions for the removal of said preservative shall be printed on the covering or the package, the provisions of this Act shall be construed as applying only when said products are ready for consumption.

Sixth. If it consists in whole or in part of a filthy, decomposed, or putrid animal or vegetable substance, or any portion of an animal unfit for food, whether manufactured or not, or if it is the product of a diseased animal, or one that has died otherwise than by slaughter.

SEC. 8. That the term "misbranded," as used herein, shall apply to all drugs, or articles of food, or articles which enter into the composition of food, the package or label of which shall bear any statement, design, or device regarding such article, or the ingredients or substances contained therein which shall be false or misleading in any particular, and to any food or drug product which is falsely branded as to the State, Territory, or country in which it is manufactured or produced.

That for the purposes of this Act an article shall also be deemed to be misbranded:

In the case of food:

First. If it be an imitation of or offered for sale under the distinctive name of another article.

Second. If it be labeled or branded so as to deceive or mislead the purchaser, or purport to be a foreign product when not so, or if the contents of the package as originally put up shall have been removed, in whole or in part, and other contents shall have been placed in such package, or if it fail to bear a statement on the label of the quantity or proportion of any morphine, opium, cocaine, heroin, alpha or beta eucaine, chloroform, cannabis indica, chloral hydrate, or acetanilide, or any derivative or preparation of any of such substances contained therein.

Third. If in package form, and the contents are stated in terms of weight or measure, they are not plainly and correctly stated on the outside of the package.

Fourth. If the package containing it or its label shall bear any statement, design, or device regarding the ingredients or the substances contained therein, which statement, design, or device shall be false or misleading in any particular: *Provided*, That an article of food which does not contain any added poisonous or deleterious ingredients shall not be deemed to be adulterated or misbranded in the following cases:

First. In the case of mixtures or compounds which may be now or from time to time hereafter known as articles of food, under their own distinctive names, and not an imitation of or offered for sale under the distinctive name of another article, if the name be accompanied on the same label or brand with a statement of the place where said article has been manufactured or produced.

Second. In the case of articles labeled, branded, or tagged so as to plainly indicate that they are compounds, imitations, or blends, and the word "compound," "imitation," or "blend," as the case may be, is plainly stated on the package in which it is

offered for sale: *Provided*, That the term blend as used herein shall be construed to mean a mixture of like substances, not excluding harmless coloring or flavoring ingredients used for the purpose of coloring and flavoring only: *And provided further*, That nothing in this act shall be construed as requiring or compelling proprietors or manufacturers of proprietary foods which contain no unwholesome added ingredient to disclose their trade formulas, except in so far as the provisions of this act may require to secure freedom from adulteration or misbranding.

Extent of Adulteration.—In any discussion of the extent to which adulterated foods are sold it must be borne in mind that the adulterated articles make up only a relatively small proportion of the food that actually passes over the counter. Flour, for example, is seldom adulterated; pepper, mustard and vanilla extract often are. For one pound of these substances sold, 1000 pounds or more of flour go out from the store. Figures given in official reports of food inspection do not represent the case exactly, because the inspectors are trained men, and purchase samples of those lines of goods which experience has shown them to be most likely to be adulterated. Brands of foods which they have reason to believe are pure they do not sample. Estimated on the total quantity sold, it is doubtful if more than 5 to 10 per cent. of the food sold is adulterated in any way, and these figures would undoubtedly be much too high for those states in which there is a well-enforced system of food inspection.

Character of Adulteration.—Much of the present propaganda in the interests of pure food and the movement for the protection of the consumer can be summed up in three words: "An Honest Label." In many cases an accurate and true statement of the contents of the can or package is the only protection needed by the consumer, and is fully as efficient as well as much cheaper than prosecutions or restrictive measures. Many of the terms used on food packages deceive only the ignorant purchaser.

"Strictly pure" is a well-understood trade term, with a meaning known to the initiated; the words "Home-Made" may cover some of the most highly developed products of synthetic organic chemistry.

The cases in which the adulteration is of a character deleterious to health are fortunately few. The use of canned goods brings certain dangers in the dissolved metals from the cans or from the solder, also from a careless habit of allowing food to stand in the opened tins. The liking for bright green pickles and peas leads to coloration by copper salts.

So rapidly do new substances come upon the market that it is of little use to put into a general text-book definite statements of the quality of many foods. A baking-powder or a spice which is honestly made to-day may next week pass into the hands of unscrupulous dealers who please the public and thereby salve their consciences.

To furnish what the people *think* they want has been the rule from the days of an earlier generation of grocers, who divided a barrel of cooking-soda in halves and set one-half on one side of the store for "saleratus" and the other on the opposite side for soda, so that there should be no suspicion in the mind of the customer that the packages came from the same barrel, and yet each might satisfy his individual preference.

Names that have passed down from a former generation as being above reproach are now found to cover adulterated goods. The trademark has passed into other and less scrupulous hands, and the new owners do not hesitate to trade upon the reputation earned by their predecessors. There are, however, several phases of the subject that should be briefly mentioned.

Breakfast Foods.—The craving for something new to stimulate a jaded appetite already spoiled by endless variety and bad combinations has led to the manufacture of a cereal preparation for nearly every day in the year, regarding some of which the state-

ment is made that they are "predigested." No better commentary on the laziness or wilful ignorance of American providers could be made than this. Little do the people know about wheat or cooking if they suppose that grain can be changed by manipulation in any kind of machine so as to give greater food value than was contained in the grain. While it is true that some of these preparations are far better than the half-cooked grains found on so many tables, the fact remains that it is the cook and not the substance which is poor. The false statements on food packages of all kinds are so absurd that they would defeat their own purpose were they viewed in the light of common sense. It is not always best to have food which is too easily digested.

A predigested food is quickly absorbed into the circulation, and hence a small quantity causes a sensation of fulness and satisfaction, which, however, soon passes away and a faintness results. This is especially true of the sugars and dextrins. Frequent meals should go with easily absorbed foods. The rapid digestion is the cause of much pernicious eating of sweets between meals, which satisfies the appetite for the time being and prevents substantial quantities of other foods being taken at the time they are offered.

From a study of analyses of a large number of foods the following conclusions are drawn by F. W. Robison:*

1. The breakfast foods are legitimate and valuable foods.

2. Predigestion has been carried on in the majority of them to a limited degree only.

3. The price for which they are sold is as a rule excessive and not in keeping with their nutritive values.

4. They contain as a rule, considerable fibre which, while probably rendering them less digestible, at the same time, may render them more wholesome to the average person.

5. The claims made for many of them are not warranted by the facts.

* Mich. Agr. Expt. Sta., Bull. 211 (*1904*).

6. The claim that they are far more nutritious than the wheat and grains from which they are made is not substantiated.

7. They are palatable as a rule and pleasing to the eye.

8. The digestibility of these products as compared with highly milled goods, while probably favorable to the latter, does not give due credit to the former, because of the healthful influence of the fibre and mineral matter in the breakfast foods.

9. Rolled oats or oatmeal as a source of protein and of fuel is ahead of the wheat preparations, excepting of course the special gluten foods, which are manifestly in a different class.

In general, the cost of these foods is low if they are considered merely as confections to please the taste, but they are expensive foods regarded as substitutes for the ordinary cereal products.

This is well shown in the following table in which the fuel value of breakfast foods and other common food products obtained for a given sum is graphically compared.

Colors and Preservatives in Food.—For many years such substances as alcohol, vinegar, sugar, salt, and the like, have been used to preserve food. Such materials are commonly held to be harmless to persons of sound digestion if used in moderate amounts. Within recent years, however, there has been a constantly increasing tendency toward the use in food products of such powerful antiseptics as formaldehyde, salicylic and benzoic acids and their salts, and boric acid. An important distinction to be borne in mind between this class of preservatives and those first named is that the former when used in food in quantity sufficient to preserve it make their presence known to the consumer by either their taste or odor. With the chemical preservatives, however, an intimation of their presence is conveyed to the consumer only by a statement on the label. It is the general feeling among those engaged in the enforcement of the food laws that the common use of these preservatives should be forbidden, or that they should be allowed only under certain definite restrictions. The question

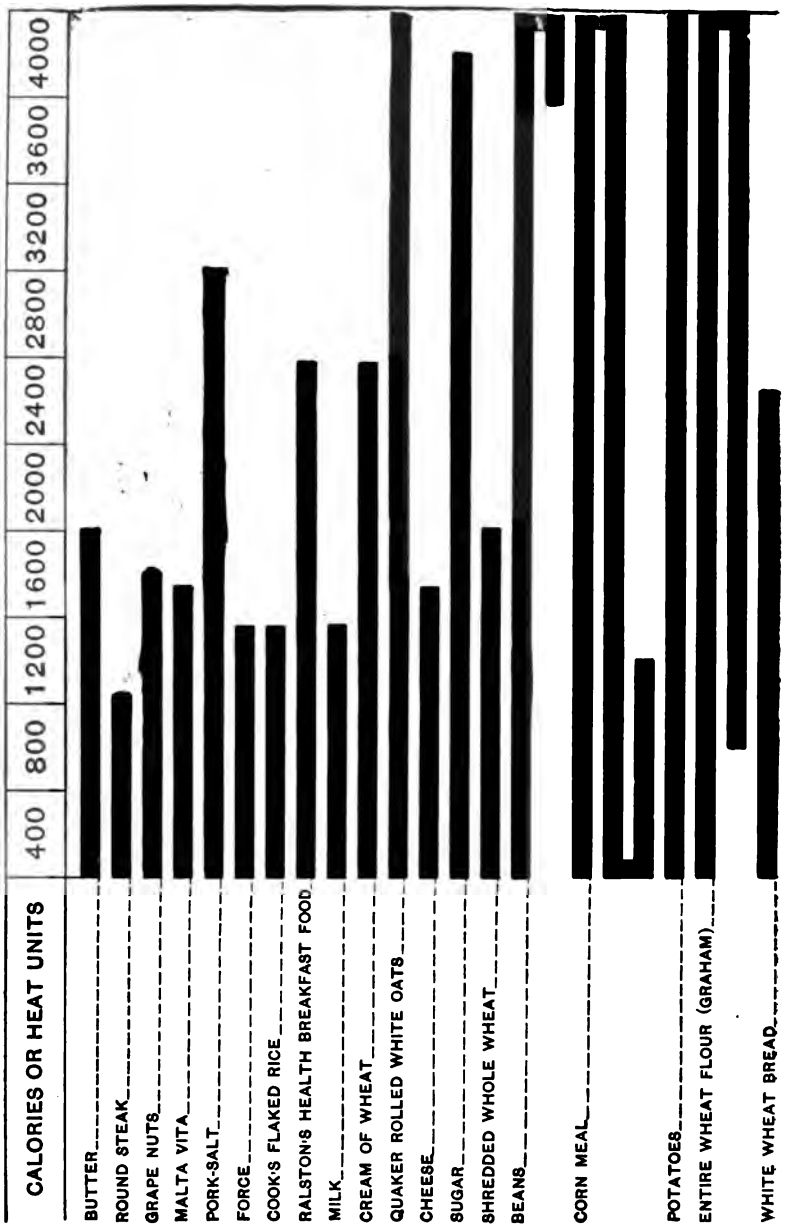
CALORIES OR HEAT UNITS
400
800
1200
1600
2000
2400
2800
3200
3600
4000
BUTTER
ROUND STEAK
GRAPE NUTS
MALTA VITA
PORK-SALT
FORCE
COOK'S FLAKED RICE
RALSTON'S HEALTH BREAKFAST FOOD
MILK
CREAM OF WHEAT
QUAKER ROLLED WHITE OATS
CHEESE
SUGAR
SHREDDED WHOLE WHEAT
BEANS
CORN MEAL
POTATOES
ENTIRE WHEAT FLOUR (GRAHAM)
WHITE WHEAT BREAD

is not one of their possible harmful effect only, although it cannot be successfully denied that their unrestricted use would lead to grave danger to health, especially in the case of invalids and children, or those with various degrees of digestive efficiency. It seems reasonable to infer that the processes of digestion being largely the result of bacterial and enzymic action, will be retarded or interfered with to a greater or less extent by substances which inhibit bacterial action in food.

There is, however, another reason for objecting to the use of chemical preservatives. By their use much food that is unwholesome and unfit for consumption can be, and is placed upon the market with no warning to the consumer. "The man who adds formaldehyde to his milk takes down the danger signal, but does not remove the danger."

Similarly, objections can be made to the use of coal-tar colors in foods. There are hundreds of food packages which would never leave the grocers' shelves were it not for the fact that by the use of artificial color their true composition and the actual nature of the materials from which they are made is hidden. Apart from any question as to the harmfulness of these dyes, there is ample reason for their use being strictly regulated by official action, in that their use except under such supervision allows the manufacturer to sell inferior articles under the appearance of standard foods; it permits the customer to be misled as to the strength and purity of the product that he buys; the age and past history of the product may be made a sealed book; finally, by the use of coloring, an unwholesome and improper food may be put upon the market.

Summary.—The chief dangers in food are from wrong proportions of proteid, fat, and carbohydrates, from fermentable and irritating decompositions, from bad methods of cooking and unsuitable combinations, from transmission of micro-organisms either by exposure to dust or by contact with filthy hands or vessels, to a

favorable medium for the growth of pathogenic germs, from unsuitable food scientifically disguised.

From this hasty survey it will be seen how little danger to health is incurred if only reasonable care is taken and if the always doubtful articles are avoided.

Take, for instance, that most commonly adulterated class, spices. Who will say that it may not be better to eat corn and buckwheat and ground peas than pure pepper? Rice is certainly a more wholesome food than ginger, and starch than soda. Glucose is even more easily absorbed than cane-sugar. These are cases of frauds on the pockets, but possibly blessings in disguise for the stomachs. When any community is so ignorant as to permit of such glaring cases of adulteration as coal-tar dyes in food, and gypsum in cream of tartar, they deserve to suffer. It is knowledge on the part of each intelligent citizen, which will mend matters, even it it is only that kind of empirical knowledge that one is forced to learn in relation to electricity and steam in order to live in a modern house.

This knowledge is now easily obtained through the city, state and governmental laboratories, and their publications are accessible to all who can read and write. There is therefore no excuse for general ignorance and credulity as to trade preparations of foods, any more than for the degrading habit of purchasing patent medicines to remedy the ills caused by the misuse of food. Both together form the saddest commentary on human weakness and lack of rational thought.

CHAPTER X.

ANALYTICAL METHODS.

In the discussion of the methods employed for the examination of food-materials, only a few typical substances have been considered, and the processes given are such as to bring into prominence the scientific aspect rather than the technical detail of the subject; at the same time it is hoped that a sufficient variety of methods is given to enable the student to gain considerable experience in the necessarily short time which can be allotted to the subject.

Both on account of its importance as a food-material and on account of its availability for the various tests, milk has been chosen as a type of animal food; moreover, it may be made to serve as an excellent example of the changes to which food-materials are liable through the growth of the micro-organisms. The analysis of milk includes determinations of specific gravity, water, or total solids, ash, fat, nitrogen, and sugar, the separation of casein and albumin, and the detection of preservatives and coloring matters.

The breakfast cereals are taken as typical of vegetable foods. The examination which may be made of this class includes the determination of moisture, ash, fat, nitrogen and proteids, starch, cellulose, and the products of peptonization and saccharification.

The nature and composition of the various fats and oils is briefly illustrated by the examination of butter and the determination of the principal constants of the butter-fat.

The results of fermentation are illustrated by the determination of alcohol in beer, wine, meat extracts, patent medicines and "temperance drinks," flavoring essences and the like. The determination of the relative proportion of volatile and fixed acids, of the saccharine products of malting, and of volatile oils or flavoring principles, is also instructive.

A more elaborate discussion of the methods used in food analysis and of the interpretation of results will be found in the larger works upon the subject. As reference books for the use of the student in the laboratory, the following in the author's experience, have been found especially helpful: Leach: Food Inspection and Analysis; Gill: Handbook of Oil Analysis; Sherman: Organic Analysis; Rolfe: The Polariscope in the Laboratory.

MILK.

General Statements.—Milk is an emulsion of fat-globules with casein and other nitrogenous bodies, mineral salts (probably in combination), sugar and water. The average percentage composition of the more important varieties of milk, as found by recent observers, is summarized in the following table:

	Water.	Sugar.	Proteids.	Fat.	Ash.
Cow	86.90	4.80	3.60	4.00	0.70
Human	88.75	6.00	1.50	3.45	0.30
Goat	85.70	4.45	4.30	4.75	0.80
Ass	89.50	6.25	2.00	1.75	0.50
Mare	90.75	5.70	2.00	1.20	0.35
Sheep	80.80	4.90	6.55	6.85	0.90

In connection with this table should be noticed the high proportion of sugar and low proportion of casein and ash in human milk as compared with cow's milk. The former is not readily curdled, the casein never separating in a compact clot which settles to the bottom, a difference which is attributed to the lower proportion of fat to casein.*

The average composition of 14,967 samples of cow's milk

* Lehmann and Hempel: *Arch. Physiol.*, 56 (*1894*), 558.

for the year 1907, analyzed directly on arrival of the milk from the farm, is given by Richmond * as follows:

	Average, 1907.
Specific gravity	1.0322
Total solids	12.69
Solids not fat	8.94
Fat	3.75

The U. S. standard for whole milk requires that it shall contain not less than 8.5 per cent of solids not fat, and not less than 3.25 per cent of milk fat.†

From the average values there are constant variations, due to the time of milking, the season of the year and the breed and feed of the cow. The proportion of milk sugar and ash is most nearly constant, while the fat is the most variable constituent.

An examination of milk as regards its *healthfulness* usually consists in determining what changes, if any, have taken place in its constituents due to the growth of micro-organisms. Milk is a natural culture medium for the growth of micro-organisms and they increase in it with almost incredible rapidity. These changes which take place are called "fermentations." The two most common are the acid and the alkaline.

Acid Fermentation.—Milk-sugar is converted wholly or in part into lactic acid under the influence of a class of organisms of which *bacillus acidi lactici* is the best known and is generally regarded as predominating. The extent to which this change has taken place is shown by the test for acidity.

Alkaline Fermentation.—In the alkaline fermentation the albumin and casein are decomposed with the formation of ammonia and other intermediate nitrogenous products, some of them of a poisonous character, as is shown by the prevalence of cholera infantum when such decomposed milk is used,

* *Analyst, 1908.*

† *Circular No.* 19, Office of the Secretary, U. S. Dept. Agriculture.

and by cases of poisoning by ice-cream, etc. This fermentation generally occurs simultaneously with the acid fermentation, but at first is much less active; at a subsequent stage, however, the alkaline fermentation becomes more pronounced, and in certain cases may completely dominate the other fermentations.

Other Fermentations.—Butyric acid fermentation may be a result of the action of one or several groups of bacteria upon the glyceride of butyric acid. This action sets free the butyric acid in part and the fat becomes in time "rancid," but this change takes place, as a rule, more slowly and is not so common as the others.

The production of *koumiss* is an instance of an artificially incited change. Various other fermentations occasionally occur which cause a slimy appearance or a bitter taste. Various colors may be imparted to the milk by the presence of *chromogenic* or color-producing micro-organisms. The student is referred to the various journals and to text-books on dairy bacteriology for accounts of these less important changes.

Sampling.—In all manipulations with milk the importance of thorough and frequent *mixing, not shaking*, cannot be too strongly emphasized; this is best accomplished by pouring it from one vessel to another. This will be found necessary even when the milk has been standing for only a few minutes, on account of the rapid rise of the cream. The apparatus used to contain or to measure milk should be thoroughly washed out as soon as possible.

PHYSICAL TESTS.

Specific Gravity.—Take the specific gravity in the usual manner by means of a hydrometer at 15°.6 C. If the temperature of the milk varies only a few degrees from this, the reading may be corrected by means of Table IX, Appendix A.

Hydrometers for special use with milk are known as lactometers and are usually so graduated as to read in degrees corresponding to the gravity. Thus in the Quevenne lactometer, the graduation from 15° to 40° corresponds to a specific gravity 1.015 to 1.040.

The New York Board of Health lactometer has an arbitrary scale, reading zero in pure water and 100 in "pure milk," which is taken as corresponding to a specific gravity of 1.029. From the scale-reading the specific gravity may readily be calculated.

Notes.—The specific gravity of milk is, in the main, a function of two factors, namely, the percentage of solids not fat and of the fat. The former raises it; the latter lowers it. The determination of the specific gravity alone is not to be relied upon as an absolute index of the purity of the milk. The specific gravity varies in general from 1.029 to 1.034, and in most cases of normal and well-mixed milk from several cows the specific gravity will lie between 1.030 and 1.032.

Opacity. — The white color and opacity of milk are largely due to the presence of the suspended fat-globules and of the casein in colloidal form. The influence of the latter is shown by the fact that the color of milk is not greatly changed after it has passed through a centrifugal separator which removes practically all of the fat. The degree of opacity and the percentage of fat may be determined by means of Feser's lactoscope, the *modus operandi* of which is given with that instrument. Another instrument of like principle is Heeren's pioscope,* which consists of an ebonite disk with a raised rim; a drop or two of milk is placed upon it, the painted glass cover placed over it, and the color of the milk matched with one of those on the cover.

Cream. — Fill the creamometer, an elongated test-tube with graduations near the top, to the zero mark with the

* *Repit. f. Anal. Chem.*, 1881, 247.

milk, add three drops of a solution of methyl violet, mix and put away in a cold place. After twenty-four hours read off the percentage of cream.

Notes.—The rapidity with which the cream rises indicates whether sodium carbonate has been added, its action being to retard the rise of cream so that the milk is never blue. Should the cream separate very quickly and the milk be blue, the indication is that water has been added or that the milk is of poor quality. The method is only approximate and does not give the amount of fat. The methyl violet is added to render the reading sharper, as it does not dissolve appreciably in the cream. Cream contains most of the fat of milk with a small proportion of the other constituents. 1010 samples of cream gave an average of 48.3 per cent. fat.

CHEMICAL TESTS.

Reaction.— Normal milk gives the amphoteric reaction, that is, it turns delicate litmus both red and blue. This is due to the presence of neutral and acid phosphates of the alkalies. The reaction of the milk soon becomes acid, however.

Acidity. — Measure 5 c.c. of milk into a small beaker, dilute with 50 c.c. of water, and titrate the acid with $\frac{N}{10}$ sodium hydroxide, using phenolphthalein as an indicator. Express the acidity in degrees, considering each tenth of a cubic centimeter of sodium hydroxide one degree.

Notes.—The acidity of milk is due to the fermentation of milk-sugar and the production of lactic acid. Under favorable circumstances this change may take place with considerable rapidity. For example, six hours after milking the acidity may be fourteen to twenty-five degrees; forty-eight hours after milking it may reach one hundred degrees. When the acidity reaches twenty-three degrees milk coagulates on

boiling.* An example of the rate of change is given in the following table:†

Day.	Acidity, c.c.	Sugar, Degrees of Rotation.
1	2.2	25.2
2	5.5	23.1
3	11.0	21.6
6	13.2	14.2
7	15.0	9.4
8	16.3	7.8
9	17.2	1.2

Total Solids.—The determination of total solids is best carried out in a platinum dish having a flat bottom about 2½ inches in diameter. Small dishes of aluminum or lead foil, or blacking-box covers answer very well, but of course cannot be ignited to obtain the ash.

Directions.—Weigh the platinum dish and add about 5.1 grams to the weights on the balance-pan. With the burette pipette deliver 5 c.c. of the well-mixed milk into the dish and weigh the whole as rapidly as possible to the nearest milligram. Evaporate the milk to dryness on the water-bath and then dry it in the oven at 100° to constant weight.

Notes.—It is important that the milk should be in the form of a thin layer, so that the evaporation of the water shall take place as quickly as possible. Under these conditions the residue obtained is nearly white; but if the process be prolonged, it may have a brownish color from the caramelization of the sugar.

Various analysts have proposed modifications of the procedure as described above, such as drying on sand or asbestos, coagulation of the milk by absolute alcohol before evaporation, and so forth, but simple evaporation in an open dish is generally regarded as the most advantageous.

Ash.—*Directions.*—Ignite the platinum dish containing the residue from the preceding determination at a low red

* Thorner: *Analyst*, 16 (*1891*), 200.

† "Thesis," Ethel B. Blackwell, M.I.T., 1891.

heat until the ash is white or nearly so. This may be done over a burner carefully regulated so that the dish is nowhere heated above a dull redness, or in a muffle furnace. After weighing the ash, test it for carbonates by adding two drops of dilute hydrochloric acid. Effervescence in the ash is quite perceptible when carbonates are present in as small amount as 0.05 per cent. If desired, the hydrochloric acid solution of the ash can be used to test for boric acid as described on page 188.

Notes.—If the temperature is raised too much during ignition, the results will be low on account of the partial volatilization of the chlorides of the milk; hence the process should be carried out at as low a temperature as will admit of the oxidation of the carbonaceous matter.

The percentage composition of the ash of milk is given by Fleischmann and Schrodt * as follows:

		Per cent.
Potassium oxide,	K_2O	25.42
Sodium "	Na_2O	10.94
Calcium "	CaO	21.45
Magnesium "	MgO	2.54
Ferric "	Fe_2O_3	0.11
Sulphuric acid,	SO_3	4.11
Phosphoric "	P_2O_5	24.11
Chlorine,	Cl	14.60
		103.28
Less oxygen corresponding to chlorine †		3.28
		100.00

The ash of genuine cow's milk is free from carbonates and borates, and the ash soluble in water is about 30 per cent. of the total. The ash determined in this way does not represent exactly the mineral salts present in the milk, since these are altered by the oxidation to some extent.

* Baumeister: "Milch und Molkerei-Producte," S. 16.

† This correction is necessary because the metals are all calculated as oxides, when, as a matter of fact, a certain proportion are present as chlorides.

Fat.— Since the fat is so important a constituent of milk, an endless variety of methods and modifications for its determination have been devised. The processes which are in most general use may be divided into three classes:

1. Estimation of the fat by simple extraction of the milk, best dried on some absorbent material.

2. Volumetric estimation of the fat liberated by chemical treatment from the milk and collected by centrifugal force.

3. Estimation of the fat by extraction from the milk itself after solution of the casein by acid.

A typical method from each class will be described in detail.

(1) **Adams' Method.** — *Directions.*—Roll a strip of fat-free blotting-paper, 22 inches long and 2½ inches wide, into a rather loose coil and fasten it by a bit of copper wire. Hold the coil in one hand and carefully run on to the upper end of it 5 c.c. of milk from a burette pipette. Place the coil, dry end downward, in the water-oven and dry it for an hour. When dry remove the wire and place the coil in the Soxhlet extractor. If preferred, the strip of paper may be held horizontally in a frame and the milk run on to it. When dry the paper is rolled into a coil and extracted. Weigh the extraction-flask, place in it 75 to 100 c.c. of petroleum ether and connect the extractor with the condenser. After the coil has been extracted for at least two hours remove the extractor and evaporate the petroleum ether at low temperature, taking care to avoid the vicinity of free flames. Dry the flask with the extracted fat in the water oven to constant weight. Avoid protracted heating, which would cause partial oxidation of the fat.

Notes.—Absorbent paper exercises a selective action on the constituents of milk so that the fat is left on the surface of the paper, mixed with only about one-third of the non-fatty solids, and hence it is more easily extracted; further, owing to the greatly increased surface exposed, the extraction of the fat is practically complete.

Ethyl ether may be used instead of petroleum ether, but care should be taken that the ether is perfectly dry, otherwise other substances than fat, principally milk-sugar, will be extracted. On the other hand, substituted glycerides may not be dissolved out by ether. For these reasons the petroleum ether is to be preferred as a solvent, although its action is considerably slower than that of the other.

Owing to the inflammable nature of the solvents employed,

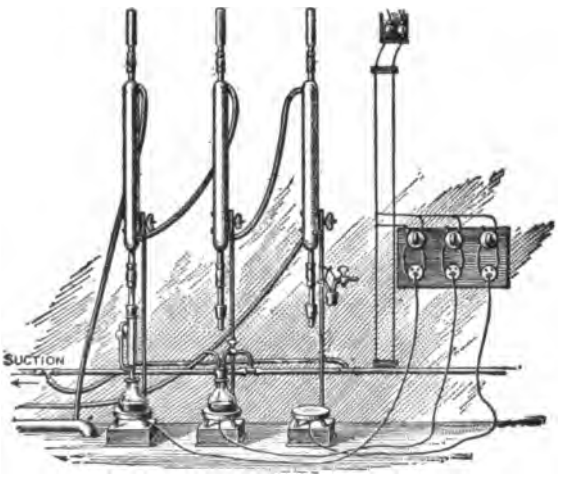

FIG. 12.—Apparatus for Fat Extraction.

it is best not to use a flame as the source of heat, but to heat the flask by means of a steam- or water-bath. In this laboratory small electric heaters about 4 inches in diameter are used and have been found safe and convenient. The complete apparatus is shown in Fig. 12. In using these it should be borne in mind that considerable quantities of ether or petroleum ether in contact with the heated surface may ignite, and caution should be taken not to evaporate any quantity of these solvents from an open vessel.

(2) **Babcock Method.**—*Directions.*—Measure 17.6 c.c. of the milk from a pipette into the long-necked, graduated whirling-

bottle. Measure out 17.5 c.c. of sulphuric acid (sp. gr. 1.83), and add it gradually to the milk, mixing the two thoroughly after each addition. Take care that none of the liquid spurts into the neck of the bottle. After mixing the milk and acid, and while the bottles are still hot, place them in opposite pockets in the centrifugal machine, in even numbers, and whirl them for five minutes, at full speed. Then remove the bottles and add hot water up to the necks, after which whirl them again for one minute. Again add hot water until the fat rises to the 8 mark on the stem. Place the bottles in the machine and whirl them at the same rate as before for one minute. Then measure the length of the column of fat by a pair of dividers, the points being placed at the extreme limits of the column, the fat being kept warm, if necessary, by standing the bottle in hot water. If now one point of the dividers is placed at the zero mark of the scale on the bottle used, the other will indicate the per cent. of fat in the milk.

Notes.—When the acid and milk are mixed the mixture becomes hot from the action of the acid on the water in the milk and turns dark-colored on account of the charring of the milk-sugar. The casein is first precipitated and then dissolved. The fat is thus separated in a pure state from the other constituents of the milk.

The fat obtained should be of a clear, golden-yellow color, and distinctly separated from the acid solution beneath it. If the fat is light-colored or whitish, it generally indicates that the acid is too weak, and a dark-colored fat with a stratum of black particles below it indicates that the acid is too strong. The best results will be obtained by the use of acid of the strength noted above.

A violet color is sometimes produced when the first portions of the acid and milk are mixed. This frequently indicates the presence of formaldehyde. (See p. 187.)

(3) **Gottlieb Method.**—*Directions.*—Measure 5 c.c. of milk into a glass-stoppered 50-c.c. cylinder and add the following reagents, being careful to add them in the order given and to shake the stoppered cylinder thoroughly after the addition of each reagent: 1 c.c. of ammonia, sp. gr. 0.96, 5 c.c. of alcohol, 12.5 c.c. of ethyl ether and 12.5 c.c. of petroleum ether. Let the cylinder stand until the lower layer is free from bubbles, over night if necessary.

With ordinary milk the separation takes place rapidly, but with sweetened condensed milk the longer time may be necessary.

Transfer the upper layer to a tared flask by means of the apparatus shown in Fig. 13. This consists of a cork carrying an ordinary glass T tube. Through the straight limb of the T tube slides a bent glass tube, which is turned up at the lower end. The tube is adjusted by sliding it through the rubber collar (*C*) so that the lower end rests just above the junction of the two layers. On then blowing gently in the side arm (*S*), the upper layer is forced out into the flask. Repeat the extraction once, using 10 c.c. each of ether and petroleum ether and blowing it off into the flask. Distil off the solvent and dry the residual fat to constant weight in the water oven.

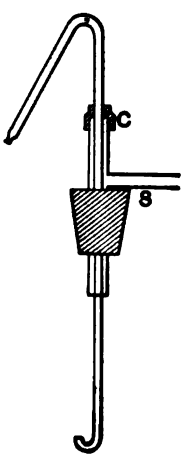

FIG. 13.

Notes.—It is almost useless to try to extract the fat from milk by shaking it directly with a solvent. An emulsion is formed with the other constituents of the milk, and it is impossible to get a good separation of the solvent even with the centrifugal machine. This is probably due to the action of the colloidal casein, because it is found that when a complete or partial solution of the casein is effected it is comparatively easy to extract and separate the fat by a solvent immiscible with water.

The method is applicable to whole milk but is especially valuable in determining fat in such products as skim milk or butter milk, which are low in fat. It is also of value in the analysis of sweetened condensed milk.

Relation between Specific Gravity, Fat, and Solids in Milk.—As has been stated already, the specific gravity of milk is, in the main, a function of two factors, namely, the percentage of solids not fat and that of the fat. The former raises it, the latter lowers it. Taken by itself it affords very little indication of the composition, but if any other item be known, it should be possible to find, by calculation, the other quantities, provided the assumption is true. The solids not fat are made up of several fluctuating constituents, but "normal milk" seems to contain them in such a constant ratio that a calculation serves at least to detect an abnormal sample. For example, given the specific gravity and solids to calculate the fat:

Specific gravity $= Gr$. The amount which each per cent. of solids not fat raises the specific gravity $= s$. The amount which each per cent. of fat lowers the specific gravity $= f$. Total solids $= T$. Solids not fat $= S$. Fat $= F$. $Gr = Ss - Ff$; or, substituting for S its value $T - F$; $Gr = (T - F)s - Ff$. The uncertainty of the calculation lies in the values of s and f, which have not been quite satisfactorily determined.

At different times various formulæ have been proposed for this calculation, varying, as a matter of course, with tha method of fat extraction employed. The one most extensively used is that of Hehner and Richmond,* which is based on extensive observation and perfected process

* *Analyst*, 13 (*1888*), 26; 17 (*1892*), 170.

of fat extraction. This formula is generally stated as follows:

$$F = 0.859T - 0.2186G,$$

where F represents the fat, T the total solids, and G 1000 × (specific gravity — 1.000).

The simple formula $\frac{6}{5}F = T - \frac{G}{4}$ answers within the limits of experimental error for normal milk, but not for skimmed or watered milk.

Example.—Data: $Gr = 1.0323$; $G = (Gr - 1) \times 1000 = 32.3$; $T = 12.90$.

$$\frac{6}{5}F = 12.90 - \frac{32.3}{4}. \quad F = 4.02 \text{ calculated}, \quad 3.99 \text{ found.}$$

A similar relation has been worked out for the proteids and sugar, so that from three determinations the whole composition may be calculated. Example as above:

Ash $= .70 = A$.

Formula: $P = 2.8T + 2.5A - 3.33F - .68\frac{G}{Gr.}$,

or $P = 36.12 + 1.75 - 13.32 - 21.28 = 3.27.$

Sugar $= T - (A + P + F)$

$= 12.90 - (.70 + 3.27 + 4.02) = 4.91.$

Where a number of calculations are to be made, Richmond's milk-scale will be found convenient. This is an instrument based on the principle of the slide-rule, having three scales, two of which, for the fat and the total solids, are marked on the body of the rule, while that for the specific gravity is marked on the sliding part. Extended tables are also used for the same purpose.

---

* *Analyst*, 13 (*1888*), 26; 17 (*1892*), 170.

Milk-sugar.—The methods for the determination of the sugar in milk may be divided into two general classes: (1) those depending on the reducing power of the sugar upon an alkaline copper solution; (2) those which are based upon observations of the degree of rotation of the plane of polarized light.

(1) Determination by Fehling's Solution according to Munson and Walker.*

Directions.—The milk must first be clarified to remove substances other than sugar which would exert a reducing action on the Fehling's solution.

Measure 25 c.c. of milk into a 500-c.c. calibrated flask. Add about 400 c.c. of water, 10 c.c. of Fehling's copper sulphate solution, then 35 c.c. of $\frac{N}{10}$ NaOH, and make up to 500 c.c. Mix thoroughly and filter through a dry filter.

Determination.—In a No. 3 beaker mix 25 c.c. of the Fehling's copper sulphate solution and 25 c.c. of the alkaline tartrate solution. Add 50 c.c. of the milk sugar solution, prepared as above, cover the beaker with a watch glass, and heat it upon wire gauze. Regulate the flame so that boiling shall begin in four minutes, and continue the boiling for *exactly two minutes.*

Filter the cuprous oxide *without delay* through asbestos in a weighed Gooch crucible, wash it with hot water until free from alkali, pour out the hot filtrate, then wash with 10 c.c. of alcohol and finally with 10 c.c. of ether. Dry the crucible for 30 minutes at the temperature of boiling water and weigh. Find the milligrams of lactose monohydrate corresponding to the weight of cuprous oxide from Table XII on page 248 and calculate the percentage present in the milk.

---

* *J. Am. Chem. Soc.* (*1906*), 663; (*1907*), 541.

Notes.—The general principle upon which all these methods depend is based on the fact that certain sugars, among which is lactose, have the power of reducing an alkaline solution of copper to a lower state of oxidation in which copper is separated as cuprous oxide. The copper salt which is found to give the most delicate and reliable reaction is the tartrate. The two solutions which make up the Fehling's solution are best preserved separately, and mixed only when wanted for use, as otherwise the reducing power of the solution is liable to change.

The amount of reduction of the copper salt to the cuprous oxide is affected by the rate at which the sugar solution is added, the time and degree of heating, and the strength of the sugar solution; hence the necessity for adopting a definite procedure and for taking the results from a table determined by exactly the same procedure for varying amounts of the sugar.

The asbestos which is used should be previously boiled in nitric acid and then in dilute sodium hydroxide and thoroughly washed. A layer about a centimeter thick should be used in the crucible, and a "blank" determination made with the Fehling's solution should not show a change in weight greater than one-half milligram. After the precipitated cuprous oxid has been weighed it may be dissolved in hot dilute nitric acid, the asbestos in the crucible washed and dried as described, when it is again ready for use. Do not remove the asbestos from the crucible.

(2) **Determination by the Saccharimeter.** — For the optical determination of milk-sugar the method of double dilution, as described by Wiley and Ewell,* will be found satisfactory.

Directions.—Into each of two flasks, marked at 100 and 200 c.c., respectively, put 65.52 grams of milk, add 10 c.c. of acid mercuric nitrate, fill to the mark, and mix by shaking.

* *Analyst*, 21 (*1896*), 182.

Filter through dry filters and polarize in a 400-millimeter tube, using the Schmidt and Haensch saccharimeter. Calculate the results as in the following example:

Weight of milk used		= 65.52 grams;
Reading from 100-c.c. flask		= 20°.84;
" " 200-c.c. flask		= 10°.15.
Then	10.15 × 2	= 20.30;
	20.84 — 20.30	= 0.54;
	0.54 × 2	= 1.08;
	20.84 — 1.08	= 19.76;
	19.76 ÷ 4	= 4.94, which is the per cent. of milk-sugar.

Notes.—The object in using the method of double dilution is to avoid the necessity of making corrections for the volume of the precipitate of casein and fat. The method is based on the fact that, within certain limits, the polarizations of two solutions of the same substance are inversely proportional to their volumes.

The flasks should be filled at nearly the same temperature as that at which the polarizations are made, and the temperature of the room should be kept as nearly as possible at 20° to avoid errors arising from marked changes in temperature.

PROTEIDS OF MILK.

Determination of Total Proteids.—Weigh 5 grams of milk into a digestion flask and determine the nitrogen by the Kjeldahl process, as directed on page 206. Multiply the per cent. of nitrogen by the factor 6.38 to obtain the per cent. of proteids. The frothing of the alkaline solution during the distillation may be prevented by the addition of a piece of paraffin about the size of a bean.

Determination of Casein and Albumin.*—*Directions.*—To 10 grams of milk add 90 c.c. of water at 40–42° C. and then 1.5 c.c. of 10 per cent. acetic acid. Agitate and warm at the above temperature until a flocculent precipitate separates, leaving a clear supernatant liquid. Filter, wash, and determine the nitrogen in the washed precipitate and filter by the Kjeldahl process. Multiply by 6.38 for the casein.

To determine the albumin neutralize the filtrate with caustic alkali and phenolphthalein and heat it at 100° C. until the precipitate settles clear. Filter, wash, and determine the nitrogen as before. Nitrogen multiplied by 6.38 equals albumin.

Notes.—The principal proteid bodies present in milk are casein and albumin. Others are present in much smaller quantity, such as fibrin or globulin.

Different observers at various times have claimed the presence of other nitrogenous bodies, but these have not been entirely substantiated.

It is now generally held that the colloidal state in which the casein is held in milk is due to the combination with it of certain mineral compounds, chiefly those of calcium. The action of precipitants is on these mineral matters, breaking up the combination and releasing the insoluble casein.

Interpretation of Results.—The most common forms of adulteration of milk are the addition of water and the removal of cream. Occasionally some foreign material may be added. A good idea of the form of adulteration may usually be gained from the relation between the fat and the solids not fat. In watered milk both of these are low, but the ratio between them is about the same as in normal milk. In skimmed milk the solids not fat may be nearly normal while the fat is very low. If the total solids and the solids not fat are both below standard,

* Van Slyke and Hart: *Am. Chem. J.*, 29 (*1903*), 170.

while the proportion of fat to solids not fat is very small, it is a fair assumption that the milk is both skimmed and watered.

Leach * states that it is nearly always safe to condemn a milk as watered, if the total solids are below 10.75 per cent., with a corresponding amount of fat.

Direct Determination of Added Water.—This may be done by determining the specific gravity of the milk-serum after coagulation and removal of the casein.† The casein is coagulated by dilute acetic acid, filtered off on a dry filter, and the specific gravity of the filtrate taken at 15° C. by the Westphal balance. The specific gravity of the serum from normal milk is never below 1.027, and only rarely below 1.029. The addition of each ten per cent. of water lowers the specific gravity by 0.0010 to 0.0035.

A more convenient method of determination is by the Zeiss immersion refractometer if this instrument is available. (See Bur. of Chem., Bul. 107 (Revised), p. 120; also Leach, Food Inspection and Analysis, p. 766.) The Abbé retractometer, page 202, can also be used.

The determination is often of importance since it enables the analyst to distinguish readily between milk which is directly adulterated on the one hand, and that which is only below standard on the other. In legal prosecutions the amount of penalty imposed is sometimes dependant on whether the analyst can show evidence of the actual addition of water.

Cane-sugar.—To detect the presence of cane-sugar boil about 10 c.c. of the milk with 0.1 gram of resorcin and 1 c.c. of hydrochloric acid for five minutes. The liquid will be colored rose-red if cane-sugar be present. The quantitative determination may be made by means of the polariscope.

* "Food Inspection and Analysis."

† Woodman: *J. Am. Chem. Soc.*, 21 (*1899*), 503; Leach: "Food Inspection and Analysis," p. 765.

Cane sugar is occasionally found in the milk through the use of diluted condensed milk to eke out the supply.

Starch.—Heat 10 c.c. of the milk to boiling in a test-tube, and when cold add a few drops of the solution of iodine in potassium iodide. The presence of even 0.2 per cent. of starch will be shown by the characteristic blue coloration.

Coloring-matters.—The principal coloring-matters added to milk are annatto, caramel, and coal-tar dyes. In general, coloring-matters are added only to watered milk, but occasionally samples which were of standard quality have been found to be colored.

Directions.—Put about 100 c.c. of the milk into a small beaker, add 2 c.c. of 25 per cent. acetic acid and allow the beaker to stand quietly for about ten or fifteen minutes in a water-bath kept at 70° C., the casein being thus separated as a compact cake. Decant off the whey, squeezing the curd as free from it as possible by means of a spatula. Transfer the curd to a flask and let it remain covered with ether for an hour or more.

Evaporate the ether extract, which contains the annatto if present, add 5 c.c. of water, and dilute sodium hydroxide until the mixture, after thorough beating and stirring with a glass rod is faintly alkaline to litmus paper, and filter through a wet filter. If annatto is present, it will permeate the filter and give it an orange color when the fat is washed off under the tap. Treat the filter with stannous chloride. If annatto is present, a pink color will be produced.

After pouring off the ether examine the milk-curd for caramel or aniline orange. If the curd is left white, neither of these colors is present. If caramel has been used, the curd will be of a pinkish-brown color; if the color is due to the aniline dye, the curd will have a yellow or orange tint. In doubtful cases the curd should be compared with one from a

milk known to be uncolored. To distinguish between the two colors shake a small portion of the curd in a test-tube with strong hydrochloric acid. The caramel-colored curd will act similarly to an uncolored curd, that is, it will *gradually* produce a deep blue color in the solution. On the other hand, the coal-tar color will *immediately* produce with the hydrochloric acid a pink color.

Note.—It is to be regretted that there is no positive test for caramel sufficiently delicate to serve here. The test as described is a negative one, the only indication of caramel being the occurrence of a colored curd in which the color is not given by the coal-tar dye.

Preservatives.—The preservatives usually added to milk are formaldehyde and borax or boric acid. Carbonate of soda is added in some cases to disguise the acidity of sour milk.

Formaldehyde.—This is generally used as a 40 per cent. aqueous solution, sold under the name of *formalin*. Several simple tests commonly used for the detection of formaldehyde will be described.

(1) When the sulphuric acid is added to the milk in making the Babcock test for fat, a bluish-violet ring will be noticed at the junction of the two liquids when formaldehyde is present. One part of formaldehyde in 200,000 parts of milk can be detected by this test, but it fails when the formaldehyde amounts to 0.5 per cent. The test is more delicate if the sulphuric acid contains a trace of ferric chloride.

(2) To 10 c.c. of milk in a small porcelain dish add an equal volume of hydrochloric acid (1.20 sp. gr.). Add one drop of ferric chloride solution and heat the dish with a small flame, stirring vigorously, until the contents are nearly boiling. Remove the flame and continue the stirring for two or three minutes, then add about 50 c.c. of water. The presence of formaldehyde will be shown by a violet color which appears in

the particles of the precipitated casein, the depth of color depending on the amount of formaldehyde present. The color should be observed carefully at the moment of dilution. This test readily shows the presence of one part of formaldehyde in 250,000 parts of milk, if fresh.

Boric Acid or Borax.—Make 25 c.c. of the milk distinctly alkaline with lime water and evaporate to dryness on the water bath. Char the residue over a flame but do not necessarily heat it until white. Digest the residue with 15–20 c.c. of water and add hydrochloric acid (1.12) until the mixture is faintly acid to litmus paper. Filter, and add 1 c.c. of acid in excess. Place a strip of turmeric paper in the solution and evaporate to dryness on the water bath. If boric acid or borates are present, the paper takes on a peculiar red color, which is changed by ammonia to a dark blue-green, but is restored by acid. Excess of hydrochloric acid should be avoided, as it turns the paper a dirty green when evaporated. This test can also be applied to the hydrochloric acid solution of the ash.

Sodium Carbonate.—Detected in the milk-ash, as on page 174. If effervescence occurs, test the original milk with rosolic acid as follows: Mix 10 c.c. of milk with an equal volume of alcohol, and add a few drops of a one per cent. solution of rosolic acid. The presence of sodium carbonate is indicated by a more or less distinct pink coloration. A comparative test should be made at the same time with milk known to be pure.

CONDENSED MILK.

It may in some cases afford an interesting variation to carry out the tests on condensed milk, this having within recent years become an important article of food. With the unsweetened condensed milk, commonly sold as "evaporated milk," the methods as used with whole milk can be applied directly to

the diluted sample. In the case of sweetened condensed milk, which is usually meant by the term condensed milk in this country, the methods must in some cases be modified, on account of the large proportion of cane sugar present.

The following are analyses of a few typical samples of sweetened condensed milk:

COMPOSITION OF SWEETENED CONDENSED MILK.

	Total Solids.	Water.	Milk Solids.	Cane-sugar.	Lactose.	Protein.	Fat.	Ash.	Degree of Condensation.	Fat in Original Milk.
1[1]	72.95	27.05	30.01	42.94	11.28	7.85	9.3	1.58	2.26	4.11
2[2]	71.03	28.97	27.49	43.45	11.78	7.51	6.6	1.60	2.29	2.88
3[2]	71.58	28.42	24.24	47.34	13.08	9.04	0.15	1.97	2.8	0.05

[1] Normal. [2] Not made from standard milk. [3] Condensed from skimmed milk.

Preparation of the Sample.—Transfer the entire contents of the can to a large evaporating dish, scraping it out clean, and work it thoroughly with a pestle until homogeneous. Weigh out 40 grams of the mixed sample and dilute to 100 c.c. in a calibrated flask.

Total Solids.—Dilute 10 c.c. of the 40 per cent. solution with an equal volume of water and evaporate 5 c.c. of the diluted mixture, corresponding to 1 gram of the sample, to dryness in a weighed platinum dish, as directed on page 173. It is of importance to have the sample very dilute in order to get an accurate determination of the solids and this can best be accomplished in the manner described.

Ash.—Ignite the residue from the determination of total solids, as in the case of ordinary milk.

Fat.—The fat is the determination of most importance since judgment of the quality of the sample is based more largely on this factor than on any other. Its determination, however, is

attended with some difficulty on account of the large amount of cane sugar present. The Babcock method, for instance, does not give satisfaction since the charring of the sugar by the sulphuric acid prevents a clean separation of the fat. The Adams method, moreover, is unreliable because the cane sugar dries on the paper coil, enclosing the fat so that it is not readily extracted by the solvent. Several modifications of these methods have been proposed, however, by which fairly good results may be obtained.

Babcock Method as modified by Leach.—Leach has modified the Babcock test so as to make it available for sweetened condensed milk by precipitating the proteids and fat with copper sulphate and then removing the interfering sugar by several extractions with water. Directions for carrying out the test will be found in Leach: Food Inspection and Analysis, p. 149, or in Bur. of Chem., Bul. 107, p. 123.

Adams Method.—This can be applied in the following manner: Dry 5 c.c. of the 40 per cent. solution on the paper coil, as described on page 175. Extract with petroleum ether in the usual manner; dry, soak the coil in 500 c.c. of water for several hours; dry, extract again for five hours and weigh the fat as usual.

Gottlieb Method.—Use 10 c.c. of the 40 per cent. solution and carry out the determination exactly as described on page 178. In many ways this method will be found to give the best results on condensed milk.

Proteids.—Determine nitrogen in 5 c.c. of the 40 per cent. solution and multiply by 6.38.

Lactose.—Use the method described on page 181 on 25 c.c. of the 40 per cent. solution.

Cane Sugar.—This may be determined with sufficient accuracy for most purposes by difference, subtracting the milk solids (the sum of the lactose, fat, protein and ash), from the

total solids. The direct estimation of the cane sugar in the presence of lactose may be carried out with the polariscope by the choice of a suitable inverting agent. The writer has obtained good results by inversion with acid mercuric nitrate, as described by Harrison.*

BUTTER.

General Statements.—Butter consists of the fat of milk, together with a small percentage of water, salt, and curd. The curd is made up principally of the casein of the milk. These various ingredients are present in about the following proportions:

Fat	78.00–90.0	per cent.; average,	82 per cent.
Water	5.00–20.0	" " "	12 " "
Salt	0.40–15.0	" " "	5 " "
Curd	0.11– 5.3	" " "	1 " "

The fat consists of a mixture of the glycerides of the fatty acids. The characteristic feature of butter-fat is the extraordinarily high proportion of the glycerides of the soluble and volatile fatty acids when contrasted with other fats.

The following may be taken as the probable composition of normal butter-fat:

Acid.	Per cent. Acid.	Per cent. Triglycerides.
Dioxystearic	1.00	1.04
Oleic	32.50	33.95
Stearic	1.83	1.91
Palmitic	38.61	40.51
Myristic	9.89	10.44
Lauric	2.57	2.73
Capric	0.32	0.34
Caprylic	0.49	0.53
Caproic	2.09	2.32
Butyric	5.45	6.23
Total	94.75	100.00

According to this, the proportion of volatile acids in butter (butyric, caproic, caprylic, and capric acids) amounts to 8.35%. The amount of volatile acid in lard, for example, is about 0.1%.

* *Analyst*, 29, 248. † Browne, *J. Am. Chem. Soc.*, 21 (*1899*), 807.

The usual examination of butter consists in the examination of the butter-fat, in order to detect the presence of foreign fats. The determination of the amount of curd may be of value also in some cases, more especially from a sanitary standpoint. The chief danger to health probably lies in the possible decomposition of the nitrogenous portion, for it is quite generally recognized that the substitution of oleomargarine is not injurious to health. It is a not infrequent practice, however, as remarked in the previous chapter, to incorporate a large amount (sometimes as high as 33 per cent.) of curd and other nitrogenous matters in fresh butter. If this is kept for any length of time, a decomposition is liable to occur which may have serious effects. Other determinations that are usually made are the water and salt.

The term "oleomargarine" is usually applied to a mixture of refined lard, "oleo oil," which is mainly the olein of beef fat, and cottonseed oil. Ordinarily a small proportion of butter is added and the product is generally churned with milk.

A comparatively recent form of butter substitute which finds extensive use in some sections of the country is "process," or "renovated," butter. The raw material, or "stock," used for the manufacture of this consists of butter which cannot be sold as butter either because of deterioration through rancidity or moulding or because, through carelessness on the part of the makers, it possesses an unattractive appearance or flavor. The chief recruiting-ground for this material is the country grocery store. The fat, separated from the curd by melting and settling, is aerated to remove disagreeable odors and leave it nearly neutral. This is then emulsified with fresh milk which has been inoculated with a bacterial culture, and the whole is chilled, granulated, and churned. The butter is then worked and packed for market in the usual manner. The character of the prod-

uct has much improved since the early days of the industry, the best grades now approximating the lower grades of creamery butter.

The "aroma" of butter seems to be connected with the decomposition produced by the action of bacteria on the casein and the small amount of milk-sugar that is present, and not with any change in the fats; there is no evidence, however, that any unwholesome effect is produced by the aroma-giving organisms.

The rancidity of butter-fat is generally considered to be due to decomposition and oxidation of the fatty acids, especially the unsaturated ones, the amount of change depending on conditions of light, heat, and exposure to air.

Examination of the Fat. — The fat is first separated from the other constituents of the butter so that it may be weighed out for the various tests.

Directions.—Melt a piece of butter, about two cubic inches, in a small beaker placed on top of the water-bath so that the temperature shall not rise above 50°–60°. After about fifteen minutes the water, salt, and curd will have settled to the bottom. (A better separation may be secured by dividing the melted sample equally between two test-tubes and whirling them for 3–4 minutes in a centrifugal machine.) Place a bit of absorbent cotton in a funnel, previously warmed, and decant off the clear fat through the cotton into a second beaker, taking care that none of the water or curd is brought upon the filter. When the filtered fat has cooled to about 40° place a small pipette in the beaker and weigh the whole.

By means of the pipette the desired amount of fat is taken out, the pipette replaced in the beaker, and the whole again weighed. The difference in weight gives the exact amount of fat taken. It is a saving of time, however, if several portions are to be weighed out, to make the weights one after

another, so that one weight will suffice for a determination. Weigh out thus: Two portions of 5 grams each into 250-c.c. round-bottomed flasks for the Reichert-Meissl method, one portion of 2.5 to 3 grams into a 500-c.c. beaker for Hehner's process, two portions of about .35 to .5 gram each into 300-c.c. glass-stoppered bottles for determination of the iodine value. In the case of the larger portions, weigh only to the nearest milligram.

(1) **Reichert-Meissl Number for Volatile Fatty Acids.** —*Directions.*—To the fat in the 250-c.c. flasks add 2 c.c. of strong caustic potash (1:1) and 10 c.c. of 95 per cent. alcohol. Connect the flask with a return-flow condenser and heat on a water-bath so that the alcohol boils vigorously for 25 minutes. At the end of this time disconnect the flask and evaporate off the alcohol on a boiling-water bath. After the complete removal of the alcohol add 140 c.c. of recently boiled distilled water which has been cooled to about 50°. The water should be added *slowly*, a few cubic centimeters at a time. Warm the flask on the water-bath until a clear solution of the soap is obtained. Cool the solution to about 60° and add 8 c.c. of sulphuric acid (1:4) to set free the fatty acids. Drop two bits of pumice, about the size of a pea, into the flask, close it by a well-fitting cork, which is tied in with twine, and immerse it in boiling water until the fatty acids have melted to an oily layer floating on the top of the liquid. Cool the flask to about 60°, remove the cork, and immediately attach the flask to the condenser.

Distil 110 c.c. into a graduated flask in as nearly thirty minutes as possible. Thoroughly mix the distillate, pour the whole of it through a dry filter, and titrate 100 c.c. of the mixed filtrate with $\frac{N}{10}$ sodium hydroxide, using phenolphthalein as an indicator. Multiply the number of cubic centi-

meters of alkali used by eleven-tenths, and correct the reading also for any weight of fat greater or less than 5 grams.

For example, if 5.3 grams of butter-fat are used, and 100 c.c. of the distillate require 27.4 c.c. of $\frac{N}{10}$ NaOH, 110 c.c. would require $27.4 \times \frac{11}{10} = 30.14$ c.c. Then $5.3 : 30.14 = 5 : x$. $x = 28.4$. x is the Reichert-Meissl number.

Notes.—The Reichert-Meissl number for genuine butter varies from 24 to 34; the average usually taken is 28.8.

Cocoanut oil gives a value of 6–8; other edible fats and oils have a value usually less than 1.

The presence of cocoanut oil is readily shown by the Reichert-Meissl number taken in connection with the *saponification value*, that is, the number of milligrams of potassium hydroxide required to saponify one gram of the fat. (For a description of the method of determining this see Lewkowitsch: Oils, Fat, and Waxes, or Gill: A Short Handbook of Oil Analysis). The Reichert-Meissl number is higher in butter fat than in cocoanut oil, while the saponification value is lower. In pure butter fat the value of the expression (Saponification value—Reichert-Meissl number—200) varies from 3.4 to 4.1; in pure cocoanut oil it runs from 47 to 50.7.*

When the fat is treated with potash it is decomposed, the glycerine being set free, and the potassium salts of the fatty acids, that is to say, the potassium soaps are formed. Hence the process is called *saponification*. For butyric acid the reaction may be expressed

$$C_3H_5(C_3H_7COO)_3 + 3KOH = 3C_3H_7COOK + C_3H_5(OH)_3.$$

The alcohol is used to dissolve the fat. But at the moment the butyric acid is set free it tends to combine with the alcohol to form a volatile ether:

$$C_3H_7COOH + C_2H_5OH = C_3H_7COOC_2H_5 + H_2O.$$

* Juckenack and Pasternack: *Ztschr. Nahr. Genussm.*, 7 (*1904*), 193.

The object of the return-flow condenser is to prevent the escape of this volatile ether and to allow of its complete saponification.

If the water used to dissolve the soap is added too rapidly, the soap may be decomposed with the liberation of the fatty acids: $C_3H_7\ COOK + H_2O = C_3H_7\ COOH + KOH$.

The fatty acids are set free at the proper time by means of sulphuric acid, and the volatile acids distilled off and titrated. The pumice is added to prevent explosive boiling.

The whole of the volatile acids do not pass over into the distillate, but only a part, the amount depending upon the rate of distillation and the volume of the distillate. Hence, in order to get uniform results, it is necessary to follow the prescribed procedure with great care.

(2) **Hehner's Method for Direct Determination of the Fixed Fatty Acids.** — *Directions.*—To the portion of 2.5 grams weighed out into the 500-c.c. beaker add 1 c.c. of caustic potash and 20 c.c. of 95 per cent. alcohol. Cover the beaker with a watch-glass and heat it on the water-bath until the liquid is clear and homogeneous. As it is not essential to prevent the escape of the volatile acids, the use of a return-flow condenser is not necessary. Evaporate off the alcohol on the water-bath and dissolve the soap in about 400 c.c. of warm distilled water. When the soap is completely dissolved add 10 c.c. of hydrochloric acid (sp. gr. 1.12), and heat the beaker in the water-bath almost to boiling until the clear oil floats. Meanwhile dry and weigh a thick filter in a small covered beaker. Allow the solution to cool until the fat forms a solid cake on top; filter the clear liquid and finally bring the solid fats upon the weighed filter. Wash the beaker and fat thoroughly with cold water, then wash out the fat adhering to the beaker with boiling water, which is poured through the filter, taking care that

the filter is never more than two-thirds full. If the filter paper is of good texture and thoroughly wet beforehand it will retain the fatty acids completely. If, however, oily particles are noticed in the filtrate, cool it by adding pieces of ice, remove the solidified particles with a glass rod and transfer them to the filter. Cool the funnel by plunging it into cold water, remove the filter, place it in the weighing-beaker and dry it at 100° to constant weight. The fat should be heated about an hour at first, then for periods of about thirty minutes, until the weight is constant within 2 mgs.

Notes.—87.5 per cent. is usually taken as the proportion of fixed fatty acids in butter-fat; 88 and 89 per cent. have been frequently found. All other fats yield from 95 to 96 per cent. of insoluble fatty acids.

(3) **Determination of Iodine Value.**—This method is based on the fact that certain of the fatty acids, notably the "unsaturated acids," as oleic acid, $C_{17}H_{33}COOH$, take up the halogens with the formation of addition products.

Directions.—Dissolve the fat in the 300-c.c. bottles in 10 c.c. of chloroform. Add 30 c.c. of the iodine solution from a pipette or glass-stoppered burette, and allow the bottles to stand with occasional shaking for fifteen minutes. Add 10 c.c. of 20 per cent. potassium iodide solution, then 100 c.c. of distilled water, and titrate the excess of iodine with $\frac{N}{10}$ sodium thiosulphate until the solution is faintly yellow. Add 2–3 c.c. of starch solution and titrate to the disappearance of the blue color. Calculate the result in grams of iodine absorbed by 100 grams of fat. This is called the Iodine Number, or Iodine Value.

At the time of making the determination carry out two "blanks" in exactly the same way except that no fat is used and only 20 c.c. of the iodine solution is added.

Standardization of the Thiosulphate Solution.—As this is

not permanent, its strength should be determined by means of the standard potassium bichromate solution, 1 c.c. of which is equivalent to 0.01 gram of iodine.

Measure 20 c.c. of the potassium bichromate from a pipette into an Erlenmeyer flask. Add 5 c.c. of potassium iodide, 100 c.c. of water, and 5 c.c. of strong hydrochloric acid. Titrate the liberated iodine with the thiosulphate solution until the color has almost disappeared, then add starch solution and continue the titration until the blue color changes to a sea-green, due to the formation of chromium chloride. The iodine is liberated in accordance with the following equation:

$$K_2Cr_2O_7 + 14HCl + 6KI = 8KCl + 2CrCl_3 + 7H_2O + 6I.$$

Calculation of Results.—Example.—From the standardization,

16.07 c.c. thiosulphate = 20 c.c. bichromate = 0.200 gram I;
1 c.c. thiosulphate = 0.0125 gram I.

Also, from blank,

20 c.c. iodine solution = 42.40 c.c. thiosulphate;
1 c.c. iodine solution = 2.12 c.c. thiosulphate.

If 30 c.c. iodine solution have been added to 0.6542 grams of fat, then $30 \times 2.12 = 63.60$ c.c. is the equivalent amount of thiosulphate solution; and if 44.85 c.c. thiosulphate were used to titrate excess of free iodine, $63.60 - 44.85 = 18.75$ c.c. is the amount of thiosulphate equivalent to the iodine combined with the fat. Then, since 1 c.c. thiosulphate is equivalent to 0.0125 gram free iodine, $\frac{18.75 \times 0.0125}{0.6542} \times 100 = 35.83$ grams of iodine combined with 100 grams fat.

Notes.—It is assumed that 100 grams of pure butter-fat absorb 30–40 grams iodine; oleomargarine, 63–75 grams; olive-oil, 83 grams; and cottonseed-oil, 106 grams.

The products formed by the action of iodine on the fats are mainly addition products with a slight proportion of substituted bodies. Thus the unsaturated *olein*,

$$(C_{17}H_{33}COO)_3C_3H_5,$$

takes up six atoms of iodine, forming an addition product, *di-iodo-stearin*, $(C_{17}H_{33}I_2COO)_3C_3H_5$.

The method in general use for determining the iodine value of fats and oils has been that of Baron Hübl,* an alcoholic solution of iodine and mercuric chloride being used as the reagent. The method here described, due to Hanus†, has the advantage that the solutions keep better, remaining practically unchanged for several months, and that the action is about sixteen times as rapid. For the fats and for oils with low iodine values the results are very close to the figures obtained by the Hübl process. If it is desired to carry out the determination by the older method, directions can be found in any standard work on the analysis of oils.

Great care should be taken that there is no change in temperature between the time of measuring the solution of iodine for the blanks and for the determinations, since the high coefficient of expansion of acetic acid may cause a material error.

The Spoon Test or "Foam" Test.—Melt a piece of the sample as large as a small chestnut in an ordinary tablespoon or a small tin dish. A test-tube can be used if desired. Use a small flame and stir the melting fat with a splinter of wood (such as a match). Then increase the heat so that the fat

* *Ding. Poly. J.*, 253, 281; *J. Soc. Chem. Ind.*, 3 (*1884*), 641.

† *Ztschr. Unters. Nahr. u. Genussm.*, 4 (*1901*), 913.

shall boil briskly, and stir *thoroughly*, not neglecting the outer edges, several times during the boiling.

Oleomargarine and renovated butter boil noisily, usually sputtering like a mixture of grease and water when boiled, and produce little or no foam. Genuine butter usually boils with much less noise and produces an abundance of foam. The difference in regard to the foam is very marked.

Note also the appearance of the particles of curd after the boiling. With genuine butter these will be very small and finely divided, hardly noticeable in fact, while with oleomargarine and renovated butter the curd gathers in much larger masses or lumps.

Notes.—This simple method is of value for giving a quick decision regarding a sample, and is especially useful for the detection of renovated butter. The differences in the composition of butter-fat brought about by renovation are so slight that chemical methods are here of no avail.

The spoon test, however, will distinguish in the great majority of cases between genuine butter on the one hand and oleomargarine and renovated butter on the other; the index of refraction or the chemical methods just described readily distinguish between the two latter.

Physical Methods.—*Microscopic Examination.*—Pure, fresh butter is not ordinarily crystalline in structure. Butter which has been melted, however, and fats which have been liquefied and allowed to cool slowly show a distinct crystalline structure, especially by polarized light. If only fresh butter were sold, and all adulterants had been previously melted and slowly cooled, this method would be all that would be necessary for the detection of adulteration. As it is, however, it is most useful in making comparative examinations of samples which have been subjected to the same conditions. From an examination of the accompanying plate,* which shows the appearance

* From photomicrographs by A. G. Woodman and A. I. Kendall, 1900.

by polarized light of four samples of known origin which were melted and cooled slowly under exactly similar conditions, it will be seen that, while the differences are noticeable, they are not sufficient in all cases to form a basis for absolute identification.

About the most that can be said is that if a small bit, about the size of a pin-head, of the fresh, unmelted sample, is taken from the center of the mass and pressed out on a slide by gentle pressure on the cover glass, it ought to show a fairly uniform field if examined with a one-sixth objective, using polarized light and a selenite plate. Other fats melted and cooled, and mixed with butter, generally show a crystalline structure and a variegated color with the selenite plate.

For a further discussion of this point the student is referred to Bulletin 13, U. S. Dept. Agric., Part I, pp. 29–40; Part IV, pp. 449–455.

Specific Gravity.—This is most conveniently determined at 100° C. by means of the Westphal balance (see Allen, *The Analyst*, 11, 223; also Bull. 13, Part IV, pp. 430–431). The pyknometer method is, however, the one adopted by the Association of Official Agricultural Chemists as the official method. See Bulletin 107, p. 130.

Melting Point.—This may be determined by the capillary-tube method as generally employed for organic substances and described in text books on organic analysis. (See for instance, Mulliken: Identification of Pure Organic Compounds, Vol. I, p. 218.) Wiley's method, however, which is the official method of the A. O. A. C., has the advantage that it avoids the incorrect results which are sometimes obtained with other methods due to the adherence of the melting fat to solid surfaces. A description of the method will be found in Bull. 107, p. 133.

Refractive Index.—The determination of the refractive index is especially valuable in food analysis on account of the ease

and rapidity with which the determination can be made and the fact that so little of the substance is necessary for the determination. Various forms of refractometers are used for the purpose, a fairly complete description of which will be found

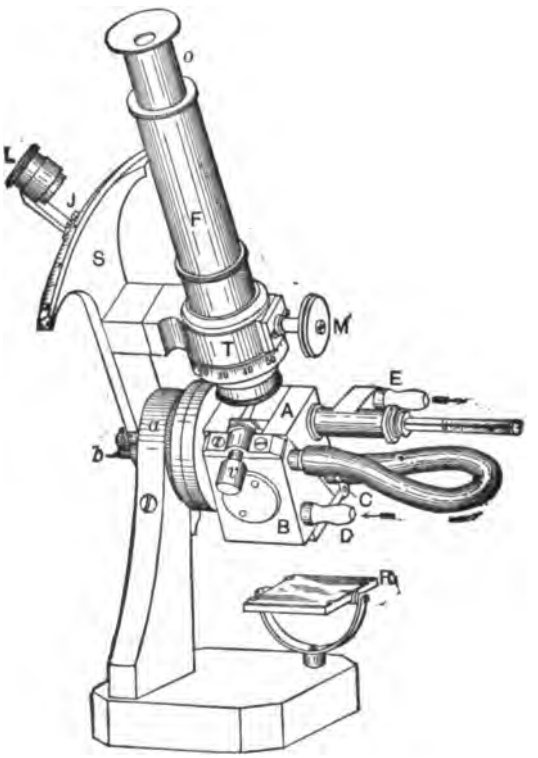

FIG. 14.

in some of the larger works, such as Leach: Food Inspection and Analysis, or Vaubel: Quantitative Bestimmung organischer Verbindungen. The instrument having the widest range is the Abbé refractometer, in which the index of refraction is determined by measuring the total reflection produced by a very thin layer of the melted fat, placed between two prisms

of flint glass. This instrument, fitted with water-jacketed prisms is shown in Fig. 14.

Directions.—Revolve the whole instrument on the axis *b* until it reaches the stop provided, then open the prism casing *AB* by giving the pin *v* a half-turn (to the right). Be sure the prism surfaces are clean. It not, clean them carefully with a soft cloth and a little alcohol. Place a few drops of the melted sample directly on the surface of the prism and clamp the two together again by turning the pin *v* in the opposite direction. Now turn the instrument back (toward the observer) as far as possible and bring the "critical line" into the field of vision of the telescope. This is done by holding the sector *S* firmly with the hand and revolving the double prism by means of the alidade *J* until the field is divided into a light and a dark portion. If the line is not sharp focus the ocular of the telescope. If it is colored it is due to dispersion of the light by the liquid and should be corrected by revolving the compensator *T* by the milled screw *M*. The correction is made by a system of two revolving Amici prisms in the lower part of the telescope. Adjust the critical line so that it falls on the intersection of the cross-hairs of the telescope. Observe the temperature by the thermometer inserted in the prism casing. In the case of solid fats a sufficiently high temperature should be maintained by a current of warm water to keep the sample well above its melting point. A temperature of 30–40° C. is usually sufficient. Do not let the temperature rise above 70° or the prisms may be injured. Read the index of refraction directly through the small lens *L*, estimating the fourth decimal. Calculate the value for the refractive index at 25° C.

Notes.—The index of refraction decreases with rising temperature. With the common oils and fats the change for each degree is very nearly a constant, amounting to 0.000365. Leach and Lythgoe* have devised a sliding scale by means of

* *J. Am. Chem. Soc.* (*1904*), 1193.

which the temperature correction may be readily made without reference to tables.

The values of n_D^{25} for genuine butter lie between 1.4590 and 1.4620; for oleomargarine the values range from 1.4650 to 1.4700.

The correctness of the adjustment of the instrument may be tested by the "test-plate" which comes with it, using monobromnaphthalene, or by means of distilled water. The theoretical value for the refractive index of water at 18° C. is 1.3330.

Determination of Water.—*Directions.*—Weigh 2 grams of butter into a shallow metal dish having a flat bottom two inches in diameter and containing a slender stirring-rod two and a half inches long. Heat the butter in the oven at 100° C. for thirty minutes, cool in a desiccator, and weigh. Heat again for periods of fifteen minutes, until the weight remains constant within 2 or 3 milligrams. During the process of heating stir the butter frequently to hasten evaporation of the water.

Determination of Salt.—*Directions.*—Weigh 10 grams of butter in a small beaker, add 30 c.c. of hot water, and when the fat is completely melted transfer the whole to a separatory funnel. Shake the mixture thoroughly, allow the fat to rise to the top, and draw off the water, taking care that none of the fat-globules pass the stopcock. Repeat the operation four times, using 30 c.c. of water each time. Make the washings up to 250 c.c., mix thoroughly, and titrate 25 c.c. in a six-inch porcelain dish, using $\frac{N}{20}$ silver nitrate with potassium chromate as an indicator.

Complete Analysis of Butter in One Sample.—*Directions.*—Weigh about 2 grams of butter into a platinum Gooch crucible, half-filled with ignited fibrous asbestos, and dry it at 100° C. to constant weight. The loss in weight is the amount of *water*. Then treat the crucible repeatedly

A B

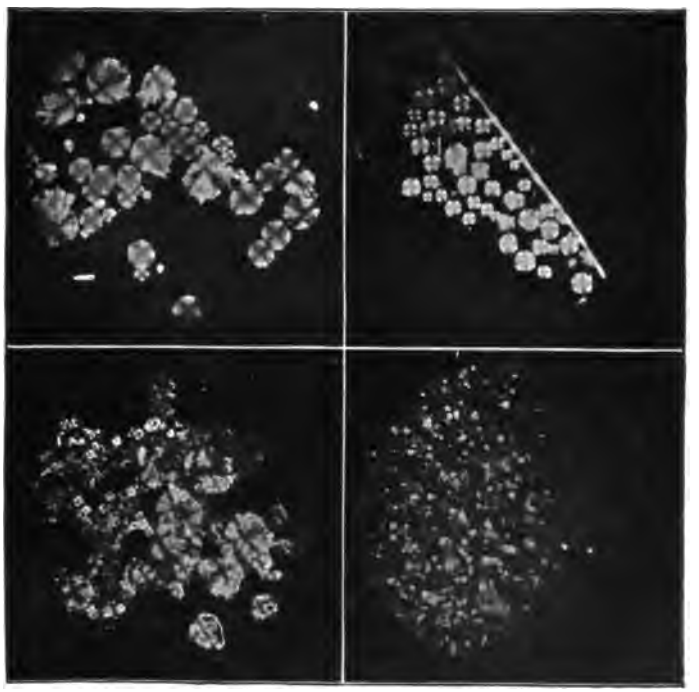

C D

A. Butter × 30. B. Beef-fat × 30.
C. Oleomargarine × 30. D. Lard × 30.

with small portions of petroleum ether, using gentle suction, and again dry it to constant weight. The difference between this and the preceding weight will be the amount of *fat.* Now carefully heat the crucible over a small flame or in a muffle until a light grayish ash is obtained. The loss in weight is the amount of *curd,* and the residual increase in weight over that of the crucible and asbestos is the *ash.* If desired, the *salt* may be washed out of the ash and determined by titration with silver nitrate after neutralizing the solution with calcium carbonate.

FLOUR, PREPARED CEREALS, ETC.

This class of foodstuffs is usually in a dry form and not liable to rapid change by micro-organisms, and the examination consists in the determination of their "food value." This may require a simple analytical process, as in the case of the quantity of nitrogen in a sample of "gluten" sold for diabetic patients, or in the case of a brand of flour to be used in a hospital or State institution. It may also require an estimation of the available food-material, as in the case of two kinds of beans or corn. The results of chemical analysis will often put the statements made on packages of breakfast cereals in a different light.

Owing to the extensive use at present of various cereal breakfast foods, many of which are modified from their original composition by cooking or treatment with malt, the extent to which the starch has by this treatment been converted to soluble forms is also an important question for consideration. The actual determination of digestibility belongs to physiological chemistry and need not be taken into consideration here.

Moisture.—*Directions.*—Spread about 2 grams of the finely ground material in a thin layer on a watch-glass and dry it in the oven at 100° C. for five hours. On account of the ready

absorption of moisture by the dried sample, the use of clipped watch-glasses will be found advantageous.

Note.—With some substances drying in a current of hydrogen or some inert gas may be necessary, but for most cereals the method given will be found satisfactory.

Ash.—*Directions.*—Weigh about 2 grams into a platinum dish, such as is used for the determination of solids in milk, and char it carefully. Ignite at a very low red heat until the ash is white, preferably in a muffle.

Notes.—If a white ash cannot be obtained in this manner, exhaust the charred mass with water, collect the insoluble residue on a filter, burn it, add this ash to the residue from the evaporation of the aqueous extract and heat the whole at a low red heat until the ash is white.

Some cereals, such as whole wheat and barley, will act destructively on platinum dishes, on account of the phosphates present but can be ignited safely in platinum in the muffle.

Ether Extracts: Fats and Oils.—*Directions.*—Place the residue from the determination of moisture, as described above, in an extraction-cone and extract it with pure anhydrous ether for sixteen hours. Evaporate off the ether and dry the residual fat at the temperature of boiling water to constant weight.

The ether extract of cereals is not pure fat but may contain more or less coloring matter or resins. Petroleum ether can be used for the extraction, giving results not essentially different from those obtained with anhydrous ethyl ether.

Total Proteids: Determination of Nitrogen by the Kjeldahl Process.*—*Principle.*—Oxidation of carbon and hydrogen, and conversion of organic nitrogen to ammonium sulphate by means of boiling sulphuric acid in presence of

* *Ztschr. anal. Chem.*, 22 (*1883*), 366.

mercury, the latter acting as a carrier of oxygen, and being converted to mercuric sulphate. Precipitation of mercury by potassium sulphide to prevent the formation of mercur-ammonium compounds when the solution is made alkaline. Setting free of ammonia by neutralization of the acid by potassium hydroxide. Distillation of ammonia into a measured quantity of $\frac{N}{10}$ acid. Titration of excess of acid.

Directions.—Transfer about 0.5 gram of the finely divided substance from a weighing-tube to a pear-shaped digestion flask, add 10 c.c. of concentrated sulphuric acid free from nitrogen, and 0.2 gram (three small drops) of metallic mercury. Place a small funnel in the neck of the flask, which should be supported in an inclined position on wire gauze and heated with a small flame until frothing has ceased and the liquid boils quietly. Then increase the heat and boil the solution for at least half an hour after it becomes colorless. Allow the flask to cool for a minute or two, and add a few crystals of potassium permanganate until the liquid has acquired a slight green or purple color.

Measure 25 c.c. of $\frac{N}{10}$ acid from a burette into a 300-c.c. Erlenmeyer flask and place the condenser-tip beneath the surface of the liquid, adding a little water, if necessary, to seal it.

Transfer the digestate with several small portions of distilled water to the distilling flask of the apparatus, add 20 c.c. of potassium sulphide solution, and connect the flask with the condenser. Add 50 c.c. of caustic potash through the separatory funnel, and distil off the ammonia by steam. When 200 c.c. have distilled over, remove the collecting-flask, after rinsing off the condenser-tip with distilled water, and titrate the excess of acid with $\frac{N}{10}$ sodium hydroxide, using methyl orange or

cochineal as indicator. If using new reagents, a blank determination should be made with 0.5 gram of cane-sugar in order to reduce any nitrates present which might otherwise escape detection.

Notes.—The temperature during the digestion must be maintained at or near the boiling-point of the acid, since at a lower temperature the formation of ammonia is incomplete.

The process is considered by Dafert * to take place in four steps: (1) the sulphuric acid takes the elements of water from the organic matter; (2) the sulphur dioxide produced by the action of the residual carbon on the sulphuric acid exercises a reducing action on the nitrogenous bodies; (3) the nitrogenous substances formed in this way are converted to ammonia by a process of oxidation; (4) the ammonia formed is fixed by the acid as ammonium sulphate.

In some cases the potassium permanganate is necessary to insure the complete conversion of the nitrogenous bodies into ammonia, although it is probable that its use is unnecessary in the majority of analyses.

The Kjeldahl process in the form outlined above is not applicable to the determination of nitrogen in the form of nitrates. In order to render it of more general application various modifications of the method have been proposed, the one generally used in this country being that suggested by Scovell.† In this method salicylic acid is used with the sulphuric acid, being converted by the nitrate into nitro-phenol. By the use of sodium thiosulphate or zinc-dust this is reduced to amido-phenol. The amido-phenol is transformed into ammonium sulphate by the heating with sulphuric acid, the use of mercury being absolutely necessary in this case to secure

* *Ztschr. anal. Chem.*, 24 (*1885*), 455.
† U. S. Dept. Agr., Bull. 16 (*1887*), 51.

the complete transformation. It is true also that certain other nitrogenous bodies, notably the alkaloids and certain organic bases, do not yield all their nitrogen to the Kjeldahl process without modifications which complicate the method. For a discussion of the efficiency of these various modifications the student is referred to a paper by Sherman and Falk.*

The per cent. of proteids may be found by multiplying the per cent. of nitrogen by an appropriate factor, the one in general use being 6.25. Recent work has shown, however, that most of the proteids of cereals contain more than 16 per cent. of nitrogen, so that the factor 6.25 gives results that are too high. Because all the older work was calculated on this factor, it is still generally used, nevertheless.

Kjeldahl-Gunning Method.—The Gunning method can be used in all cases where the Kjeldahl-Wilfarth modification, just described, is employed, and in some ways it is simpler.

The digestion and distillation are carried out as described on page 207, using the same amount of sample, together with 20 c.c. of concentrated sulphuric acid and 10 grams of powdered potassium sulphate. No mercury and consequently no potassium sulphide is used. 100 c.c. of the potash should be added instead of 50.

Note.—The potassium sulphate is added to raise the boiling point of the sulphuric acid and thus shorten the time required for the digestion.

Carbohydrates.—The *total carbohydrates*, often stated in analyses as "nitrogen-free extract," may be readily obtained by subtracting from 100 the sum of the percentages of the other constituents, viz., moisture, ash, ether extract, and nitrogenous bodies. In many cases, however, especially with the cooked or treated cereals and with such

* J. Am. Chem. Soc. (*1904*), **26**, 1469.

classes of cereal preparations as infant or invalid foods, a further study of the carbohydrates is desirable. These are made up of two general classes: (*a*) *soluble carbohydrates*, including sugars, as sucrose, dextrose and maltose, dextrin and soluble starch, by the latter term being meant starch which is soluble in water but still gives the characteristic blue color with iodine, in distinction from some of the more completely broken-down forms like dextrin, which no longer give blue or purple colors with iodine; (*b*) *insoluble carbohydrates*, including starch, pentosans, lignin bodies, and cellulose. The three latter occur chiefly in the husk or envelope of the grain or in the woody fibre of the plant. The pentosans or gums are distinguished from one another by the formation of specific sugars upon hydrolysis with acids. For ordinary analytical purposes it is sufficient to determine the lignin and cellulose together as "crude fibre." Since the exact procedure to be followed in the determination of the carbohydrates varies largely with each specific case, only a general outline can be presented here.

Sugars.—The finely ground material, previously dried and extracted with ether for the removal of crude fat, is extracted with 85 per cent. alcohol. In the extract the reducing sugars may be determined by means of Fehling's solution as described on page 181, and the sucrose determined in the same way after inversion with hydrochloric acid.

Dextrin and Soluble Starch.—The residue from the extraction of the sugars is treated for eighteen to twenty-four hours with water at laboratory temperature with frequent agitation, made up to definite volume, and filtered. This may be tested with iodine, and if no blue color is produced, evaporated to small volume, and the dextrin converted to dextrose by dilute hydrochloric acid and determined by

Fehling's solution. In some few cases, however, a blue color with iodine may indicate the presence of soluble starch, in which case an aliquot part of the filtrate may be treated with an excess of barium hydroxide to precipitate the starch. In the filtrate from this precipitate the dextrin is determined by inversion and copper reduction as before. The difference between the dextrin thus found and the first determination gives the soluble starch.

Starch.—The methods for the determination of starch vary with the condition in which the starch is found. In the case of nearly pure starch it may be converted into dextrose by boiling with dilute acid, the dextrose being then determined by Fehling's solution in the usual way. Hot acids, however, cannot be used to convert starch in the natural state, as it is found in cereals, because other carbohydrate bodies, especially the pentosans, become soluble under these conditions and the results are too high. In such cases the starch is brought into solution by treatment with diastase or by heating with water under pressure. The results obtained by direct acid hydrolysis, however, in cases where the highest accuracy is not required, may be sufficient and the method is much quicker and easier of execution than the digestion with diastase.

Direct Acid Hydrolysis.—*Directions.*—Weigh out from 2 to 5 grams of the sample, depending upon the amount of starch present, and wash on a filter with five successive portions of 10 c.c. each of ether. Allow the ether to evaporate from the residue and then wash it with 10 per cent. alcohol until free from soluble carbohydrates. 150 c.c. of the dilute alcohol is generally sufficient, but if much reducing sugar or dextrin is present, as may be the case with malted cereals, more will be necessary. Wash the residue from the filter with 200 c.c. of water into a 500 c.c. graduated flask, add 20 c.c. of hydrochloric acid, sp. gr. 1.125, place a funnel in the neck of the flask to

retard evaporation, and heat in a boiling water bath for two and one-half hours. Cool, nearly neutralize with sodium hydroxide and make up to 500 c.c. Filter, and determine dextrose in an aliquot portion, 25 or 50 c.c., of the filtrate, using the method described on page 181. Convert dextrose to starch by the factor 0.9.

Note.—The washing to remove soluble carbohydrates is performed with dilute alcohol rather than with water because the former is less likely to carry starch granules through the paper. The sugar solution when added to the Fehling's solution should be clear and only faintly acid. It should in general contain not more than 0.5 per cent. of reducing sugar.

Determination with Diastase.—*Directions.*—Treat 2 to 5 grams of the sample with ether and dilute alcohol, as in the previous method, and wash the residue into a 250-c.c. flask with 50 c.c. of water. Heat slowly to boiling, or immerse the flask in boiling water, until the starch gelatinizes, stirring constantly to prevent the formation of lumps. Cool to 55° C., add 20–40 c.c. of malt extract, and keep the solution within two degrees of the stated temperature for an hour or until the solution no longer gives the starch reaction with iodine under the microscope. In either case heat the solution again to boiling to gelatinize any remaining starch granules, test again and if starch is found, cool to 55° C., and treat as before, using a fresh portion of malt extract. Continue this treatment until, when carefully examined under the microscope, a drop of the solution fails to give the iodine reaction for starch. Cool, make up to 250 c.c. and filter through a dry filter. Transfer 200 c.c. of the filtrate to a 500-c.c. graduated flask, add 20 c.c. of hydrochloric acid, sp. gr. 1.125, and carry out the determination as described in the preceding method.

A blank determination must be carried through, using 50 c.c. of water and exactly the same amount of malt extract as

used in the regular procedure, in order to correct for the cupric reducing power of the malt extract.

Malt Extract.—Treat 40 grams of fresh coarsely ground malt several hours with 200 c.c. of water, shaking occasionally. Filter and add a few drops of chloroform to prevent the growth of molds.

Notes.—The action of the diastase on the gelatinized starch is to convert it into maltose and dextrin, that is, into soluble bodies that can be separated by filtration from the pentosans and other carbohydrates that give the high results in the direct acid method. By the action of acid (hydrolysis) the maltose and dextrin are converted to dextrose.

The determination should, if possible, be carried through without interruption. In case this cannot be done salicylic acid may be used to prevent fermentation, not adding it, however, until after the digestion with diastase.

If the malt itself is not readily procurable, certain forms of prepared diastase are on the market and may be found more convenient either for analytical use or for purposes of illustration. When possible, however, it is preferable to use the freshly prepared malt extract, as the prepared diastase, made at different times and from separate portions of malt, may show great differences in hydrolytic power.

It is sometimes convenient to use freshly collected saliva, this being free from carbohydrate. In this case the digestion should be carried out at 38° C. instead of 55° C.

Pentosans.—These are determined usually directly upon the original material. The methods in general use depend upon the conversion of the pentose substance into furfural by distillation with strong acid and the subsequent precipitation and estimation of the furfural. The latter may be done by treatment with phenylhydrazine acetate and formation of the furfural hydrazone, or by the formation of an insoluble

condensation product with phloroglucin according to the method of Councler.

For the details of these methods reference may be made to Wiley, "Principles and Practice of Agricultural Analysis," Vol. III, p. 178 *et seq.*, also an article by Sherman.* The phloroglucin method is given as a provisional method in Bull. 107 of the Bureau of Chemistry.

Crude Fibre.—The Weende method, the method adopted by the Association of Official Agricultural Chemists, is based on the assumption that the starch and other digestible carbohydrates and proteid will be removed from the cereal by successive digestion at a boiling temperature with acid and alkali of a definite strength. The complex body thus obtained is not a definite chemical compound, but may be considered as being composed largely of cellulose.

Use 2 grams of the finely ground sample and wash on a filter with 5 portions of 10 c.c. each of ether. (The residue from the determination of "ether extract" can be used if desired.)

Transfer the washed material to a 500-c.c. Erlenmeyer flask, add 200 c.c. of boiling 1.25 per cent. sulphuric acid, place a funnel in the neck of the flask and boil *gently* for 30 minutes. Filter on a ribbed filter and wash with several portions of boiling water. Transfer the precipitate by means of 200 c.c. of boiling 1.25 per cent. sodium hydroxide in a small wash-bottle to the same 500-c.c. Erlenmeyer flask, and boil again gently for 30 minutes.

Filter on ignited asbestos in a Gooch crucible, wash with boiling water until free from alkali, then with 10 c.c. of alcohol, and finally with 10 c.c. of ether. Dry at the temperature of boiling water to constant weight. Ignite carefully at first,

* *J. Am. Chem. Soc.*, 19 (1897), 291.

then at a low red heat until the organic matter is destroyed. Calculate the loss on ignition as "crude fibre."

Note.—The filtration will be found to proceed fairly rapidly if the solution is filtered hot and care is taken to keep the residue from the filter as long as possible.

The sulphuric acid and sodium hydroxide should be carefully prepared and the strength determined by titration.

EXAMINATION OF FERMENTED LIQUORS.

WINE.

General Statements.—The object of a wine analysis is ordinarily to determine whether or not a wine is pure and unadulterated, or whether it has been properly made. Special works furnish sufficient information concerning processes of manufacture, and it is essential to know here only the general composition of the grape-juice or "must" and how, by the natural process of fermentation, this may be altered in the finished product.

The "must" contains *sugars* (mainly dextrose); dextrin; *organic acids and salts*, mainly tartaric and malic acids; salts of inorganic acids, chiefly phosphates, sulphates, and chlorides. Various *extractive matters*, which largely affect the color and flavor of the wine, together with a little *tannin* and albuminous substances, are also present. The wine will contain then, besides water, the following: *Alcohol, glycerine*, frequently some *sugar* that has escaped fermentation, *ethers*, which determine largely the "bouquet" of the wine, and more or less of the acids, salts, coloring and extractive matters of the must, together with varying amounts of carbonic, acetic, and succinic acids.

According to differences in their composition wines may be divided into various classes, such as "dry" wines, which

contain very little sugar, as distinguished from the sweet wines, in which a notable quantity of sugar has escaped fermentation, or to which an addition of sugar has been made subsequent to the main fermentation. Or they may be divided according to the content of alcohol into natural wines and those *fortified* by addition of alcohol, as port, sherry, and madeira.

The composition of the wine may be changed, moreover, by the various methods which are used for its "improvement," such as *fortification* already mentioned, *plastering*, *petiotization*, etc. Information regarding these methods will be found in some of the larger works mentioned in the bibliography.

The determinations of most value in judging the purity of wine are alcohol, glycerine, extract, ash, total and volatile acids. The actual percentages of these substances are not of so great value as certain relations between them, such as the ratio of ash to extract, extract to alcohol, alcohol to glycerine, alcohol to acids, and volatile to total acids. Examination for preservatives and foreign coloring matters should also be made. It should be remembered, however, in judging the quality of American wines that the standards of European practice are not entirely applicable and that further study will be necessary before even tentative standards can be fixed.

Specific Gravity.—This is to be taken by means of the Westphal balance or Sprengel tube at 15°.5 C.

Notes.—Where the specific gravity of the sample is known, the various portions taken for analysis can be more conveniently measured than weighed. The results can be calculated to per cent. by weight by dividing the results expressed as grams per 100 c.c. by the specific gravity.

Effervescing wines should, before analysis, be vigorously

shaken in a large flask to hasten the escape of carbon dioxide. The liquid may then be poured from under the foam into another vessel.

Alcohol.—*Principle.*—The alcohol is obtained freed from everything but water, and its amount determined by ascertaining the specific gravity of the mixture, and taking the per cent. from the tables.

Directions.—Measure (or weigh) 100 c.c. of the wine into a 500-c.c. round-bottomed flask. Add 50 c.c. of water, neutralize free acid with $\frac{N}{10}$ sodium hydroxide, and add 0.5 gram of tannic acid, if necessary, to prevent foaming. Distil off about 95 to 98 c.c. into a 100-c.c. graduated flask. Fill up to the mark with distilled water, mix thoroughly, and take the specific gravity of the distillate at 15°.5 C. with a pyknometer. The percentage of absolute alcohol by volume corresponding to the observed density will be found in Table X, page 244.

To find the alcohol by weight in the sample, multiply the per cent. of alcohol in the distillate as taken from the table, by the weight of the distillate and divide the result by the weight of the sample used.

Notes.—The object of neutralizing the wine with sodium hydroxide is to prevent the distillation of volatile acids, principally acetic. A certain amount of volatile ethers may also pass over into the distillate, but in most cases it is so slight that its influence may be neglected.

Normal wines ordinarily contain between 4.5 and 12 per cent. of alcohol except in the case of " fortified " wines, where the amount may be even 20 per cent. Fermentation does not yield more than about 14 per cent. of alcohol.

Extract.—The method to be employed depends on the proportion of extract. A preliminary calculation should be made by the aid of the formula

$$x = 1 + d - d';$$

where x is the specific gravity of the dealcoholized wine, d the specific gravity of the wine, and d' the specific gravity of the distillate obtained in the determination of alcohol. The value for x is found from Table XI, page 247.

Dry Wines.—(Having an extract content of less than 3 per cent.) Evaporate 50 c.c. on the water-bath to a sirupy consistency in a flat-bottomed platinum dish. Heat the residue in the oven at 100° C. for two hours and a half, cool in a desiccator and weigh.

Sweet Wines.—When the extract content is between 3 and 6 per cent. treat 25 c.c. of the sample as described under dry wines. When the amount of extract exceeds 6 per cent. it is best to accept the result found from the table and not to determine it gravimetrically.

Notes.—The gravimetric determination will be inaccurate with wines high in extract on account of the serious error caused by drying levulose at high temperatures. The figures in the table are based on determinations made at 75° C. in vacuo.

Wine made from the juice of ripe grapes rarely contains less than 1.5 per cent. of extract in the case of white wines and about 2.0 per cent. in the case of red wines. The amount of extract decreases of course with age.

Alcohol-extract Ratio.—The municipal laboratory of Paris considers a wine "fortified" if the alcohol exceeds 4.5 times the extract for red wines and 6.5 for white wines. The amount of added alcohol is calculated by the municipal laboratory by subtracting the "natural" alcohol (extract $\times 4.5$ or 6.5) from the total alcohol.

Ash.—Ignite the residue from the extract determination as described on page 206.

Note.—The amount of ash in a natural wine averages about 10 per cent. of the extract, varying ordinarily between 0.14 per cent. and 0.35 per cent.

Glycerine.—Evaporate 100 c.c. of wine in a porcelain dish on the water-bath to a volume of about 10 c.c., and treat the residue with about 5 grams of fine sand and with from 1.5 to 2 c.c. of milk of lime (containing 40 grams $Ca(OH)_2$ per 100 c.c.) for each gram of extract present, and evaporate almost to dryness. [With wines whose extract exceeds 5 grams per 100 c.c., heat the portion to be used in the determination of glycerine to boiling in a flask, and treat with successive small portions of milk of lime until it becomes, first, darker, and then light in color. When cool, add 200 c.c. of 96 per cent. alcohol (sp. gr. 0.8118), allow the precipitate to subside, filter, and wash with 96 per cent. alcohol (sp. gr. 0.8118). Evaporate the filtrate to about 10 c.c., add about 5 grams of sand and from 1.5 to 2 c.c. of milk of lime, and proceed as before.] Treat the moist residue with 5 c.c. of alcohol (96 per cent. by volume), remove the substance adhering to the sides of the dish with a spatula, and rub the whole mass to a paste, with the addition of a little more alcohol. Heat the mixture on the water-bath, with constant stirring, to incipient boiling, and decant the liquid into a flask graduated at 100 and 110 c.c. Wash the residue repeatedly by decantation with 10 c.c. portions of hot 96 per cent. alcohol. Cool the contents of the flask to 15°, dilute to the 110-c.c. mark with 96 per cent. alcohol, and filter through a folded filter. Evaporate 100 c.c. of the filtrate to a sirupy consistency in a porcelain dish, on a hot, but not boiling, water-bath, transfer the residue to a small glass-stoppered graduated cylinder with 20 c.c. of absolute alcohol, and add three portions of 20 c.c. each of absolute ether, with thorough shaking after each addition. Let stand until clear, then pour off through a filter, and wash the cylinder three times or more with a mixture of one part absolute alcohol to one

and one-half parts of absolute ether, pouring the wash-liquor also through the filter. Evaporate the filtrate to a sirupy consistency, dry for one hour at the temperature of boiling water, weigh, ignite, and weigh again. The loss in ignition increased by one-tenth gives the glycerine.

Notes.—The ratio of glycerine to alcohol is of great importance in judging the purity of a wine. According to European standards in pure wines the glycerine-alcohol ratio varies from between 6 and 14 parts by weight of the former to 100 of the latter. The little work done on American wines indicates a lower ratio.

Free Acids: Total Acidity Calculated as Tartaric Acid.—Titrate 10 c.c. of the wine with $\frac{N}{10}$ sodium hydroxide. The end-point is reached when a drop of the liquid placed upon faintly-red litmus paper produces a blue spot in the middle of the portion moistened. Calculate the results as tartaric acid. One c.c. $\frac{N}{10}$ sodium hydroxide = 0.0075 gram of tartaric acid.

Volatile Acids Calculated as Acetic Acid.—Measure 50 c.c. of wine into a 300-c.c. flask provided with a cork having two perforations. One is fitted with a tube 6 mm. in diameter and blown out to a bulb 40 mm. in diameter a short distance above the cork; this tube is connected with a condenser. The other perforation carries a tube reaching nearly to the bottom of the flask and drawn out to a small aperture at its lower end; this is connected with a 500-c.c. flask containing water. Heat both flasks to boiling; then lower the flame under that containing the wine, adjusting the flame so that the volume of liquid remains constant, and continue the distillation by means of steam until 200 c.c. have gone over.

Titrate the distillate with $\frac{N}{10}$ sodium hydroxide, using phenolphthalein as an indicator. Calculate the results as acetic acid. One c.c. $\frac{N}{10}$ sodium hydroxide = 0.0060 gram of acetic acid.

Fixed Acids Calculated as Tartaric Acid. — These may be found by calculating the volatile acids as tartaric and subtracting the result from the total tartaric acid found by direct titration.

Note.—The total acids in a wine vary usually between 0.45 per cent. and 1.5 per cent. The acid content is frequently diminished by aging or by the separation of cream of tartar. The volatile acid should, in general, not be over 0.12 to 0.16 per cent., depending upon the age of the wine. A wine properly made should not have the volatile acid, estimated as acetic, exceed one-fourth of the total free acid, calculated as tartaric.

Coloring Matters: Detection of Coal-tar Dyes.—*Double Dyeing Method of Sostegni and Carpentieri.**—Fifty c.c. of the sample are diluted to 100 c.c. with water, filtered if necessary, acidified with from 2 to 4 c.c. of 10 per cent. solution of hydrochloric acid, and a piece of woolen cloth which has been washed in a very dilute solution of boiling potassium hydroxide, and then washed in water, immersed in it and boiled for five to ten minutes. The cloth is removed, thoroughly washed in water, and boiled with very dilute hydrochloric acid solution. Then after washing out the acid the color is dissolved in a solution of ammonium hydroxide (1 to 50). With some of the dyes solution takes place quite readily, while with others it is necessary to boil some time. The wool is taken out, a slight excess of hydrochloric acid is added to the solution, another piece

* *Ztschr. anal. Chem.*, 35 (*1896*), 397.

of wool is immersed and again boiled. With vegetable coloring matter this second dyeing gives practically no color, and there is no danger of mistaking a fruit color for one of coal-tar origin.

Notes.—It is absolutely necessary that the second dyeing should be made, as some of the coal-tar dyes will dye a dirty orange in the first acid bath which might be easily passed for vegetable color but on treatment in alkaline bath and second acid bath becomes a bright pink.

Another advantage in the second dyeing is that if a large piece of woolen cloth is used in the first dyeing, and a small piece in the second dyeing, small amounts of coloring matter can be brought out much more decidedly in the second dyeing, where practically all of the vegetable coloring matter has been excluded.

Several colors which are not coal-tar dyes, notably archil, archil derivatives, and sulphonated indigo, give reactions by this method and are liable to be confused with coal-tar colors. For hints as to the method for detecting these reference may be made to Bulletin 107, Bureau of Chemistry, page 190.

Methods for the further separation and identification of the artificial colors cannot be taken up here for lack of space. The student is referred to Leach: "*Food Inspection and Analysis*," p. 628 *et seq.*; Mulliken: "*The Identification of Commercial Dyestuffs*;" and a paper by Green, Yeoman, and Jones on "*The Identification of Dyestuffs on Animal Fibres.*"*

Preservatives.—The preservatives most commonly employed in wines are salicylic and benzoic acids. Sulphurous acid and sulphites are also used. For methods of detecting other substances less commonly employed, such as abrastol, beta-naphthol, etc., reference may be made to Bulletin 107 of the Bureau of Chemistry. Boric acid is occasionally used,

* *J. Soc. Dyers and Colourists, 1905, 236–243.*

but since a small amount of it is normally present in wines, tests, to be of value, should be quantitative.

Salicylic Acid.—Acidify about 50 c.c. of the wine with 5 c.c. of dilute (1:3) sulphuric acid and extract in a separatory funnel with 25 c.c. of ether. Draw off the lower layer, wash the ether twice with water, using 10 c.c. each time and finally evaporate the ether in a porcelain dish at room temperature. To the residue in the dish add 2 to 3 drops of ferric alum solution (p. 261). or very dilute ferric chloride. A deep purple or violet color indicates salicylic acid.

Notes.—Not more than 50 c.c. should be used for the test, since a trace of salicylic acid seems normally present in some wines.

The washing with water is to free the ether from traces of sulphuric acid which interferes with the development of the violet color.

*Benzoic Acid.**—Acidify about 100 c.c. of wine with sulphuric acid, extract with ether, and evaporate the ethereal solution as in the detection of salicylic acid. Treat the residue with 2 or 3 c.c. of strong sulphuric acid. Heat till white fumes appear; organic matter is charred and benzoic acid is converted into sulpho-benzoic acid. A few crystals of ammonium nitrate are then added. This causes the formation of metadinitrobenzoic acid. When cool the acid is diluted with water and ammonia added in excess, followed by a drop or two of ammonium sulphide. The nitro-compound becomes converted into ammonium metadiamidobenzoic acid, which possesses a red color. This reaction takes place immediately, and is seen at the surface of the liquid without stirring.

Sulphurous Acid and Sulphites.—See directions under Beer, page 225.

* Mohler: *Bull. Soc. Chim.* [3], 3, (*1890*) 414.

BEER AND OTHER MALT LIQUORS.

Before analysis the sample must be thoroughly shaken in a large flask, in order to remove carbon dioxide.

Specific Gravity.—Taken with a pyknometer or Sprengel tube at 15°.5 C.

Alcohol.—Determined as in the analysis of wine. It will not be necessary to neutralize the free acid before distilling.

Extract.—Determine the extract content corresponding to the specific gravity of the dealcoholized beer according to Table For this purpose employ the formula

$$Sp = g + (1 - g'),$$

in which Sp is the specific gravity of the dealcoholized beer, g the specific gravity of the beer, and g' the specific gravity of the distillate obtained in the determination of alcohol. Instead of using this formula the residue from the distillation of alcohol is sometimes diluted to the original volume, and its specific gravity taken. This is often impracticable owing to the necessity of employing tannic acid to prevent foaming in the distilling flask, and owing to the coagulation of proteids during the distillation.

Note.—The extract of beer cannot be accurately determined by evaporation and drying at the boiling-point of water because of the dehydration of the maltose.

Ash.—Evaporate 25 c.c. to dryness and determine as in the analysis of wine.

Free Acids.—Heat 20 c.c. to incipient boiling to expel carbon dioxide and titrate as in the analysis of wine. Fixed acids, consisting principally of lactic and succinic, are calculated as lactic acid. One c.c. of $\frac{N}{10}$ sodium hydroxide = 0.0090 gram of lactic acid.

Reducing Sugar.—Dilute 25 c.c. of the beer, freed from carbon dioxide, to 100 c.c. Determine the reducing sugar in 25 c.c. of this solution as directed on page 181, enough water being added to make the total volume of the Fehling's solution-sugar mixture 100 c.c. Express the results in terms of maltose, as given in Table XII.

Preservatives.—The preservatives most commonly employed in beer are benzoic and salicylic acids and their sodium salts, sulphites and fluorides.

Benzoic and Salicylic Acids.—Detected as described under Wine.

Sulphites.—Qualitative Test.—Use an apparatus similar to that described for the determination of volatile acids in wine. To 50 c.c. of the sample add about a gram of sodium bicarbonate, 20 c.c. of 20 per cent. phosphoric acid, and immediately connect the flask with the condenser. Pass steam through the flask until about 20 c.c. have collected in the distillate. To the distillate add bromine water in slight excess and boil. Expel the excess of bromine and test for sulphuric acid with hydrochloric acid and barium chloride in the usual manner.

Notes.—The method described does not distinguish between free sulphurous acid and that present in the form of sulphites. The former can be distilled without the addition of phosphoric acid.

The presence of sulphites in a sample should not be considered evidence of added preservatives unless an excessive amount is found since the use of sulphured malt or hops may introduce a small amount. To obtain conclusive data a quantitative determination of the amount present should be made. This can be done by a method very similar to that used for the detection, taking greater precautions against oxidation and absorbing the sulphurous acid in standard iodine solution. Care should be taken also to avoid the distillation of iodine-

reducing substances other than sulphurous acid. For a detailed discussion of the determination reference may be made to the following papers: Bureau of Chemistry, Bull. 107, p. 187; Gudeman: *J. Ind. Eng. Chem.*, 1909, p. 81.

Fluorides.—The well-known qualitative test for fluorides by etching a glass plate may be modified by the use of a suitable condenser and made sufficiently delicate to be used here. It is possible also by suitable regulation of the temperature to make the test approximately quantitative.*

FLAVORING EXTRACTS.

The work on alcoholic liquids can be pleasantly varied by substituting for it in some cases the determination of alcohol and other important components of the usual flavoring essences, the most important of which are vanilla and lemon. Several important types of food methods, such as the determination of essential oils and quantitative extraction with volatile solvents, are also brought to the attention of the student.

VANILLA.

Vanilla extract is a dilute alcoholic tincture of the vanilla bean, the fruit of a climbing plant of the orchid family. The best grades are made by allowing the cut and bruised beans to macerate in the alcohol for several months, the liquid thus obtained being deep brown in color, with a delightful perfume and flavor. Sugar is added to assist in the extraction and to sweeten the product.

The cost of a quart of the pure extract, according to Winton,†

* Woodman and Talbot: *J. Am. Chem. Soc.*, *1906*, 1437; *1907*, 1362.

† *Conn. Agr. Exp. Sta. Report*, *1901*, 150.

is from about 60 cents to $2.50, depending chiefly upon the grade of beans used.

The composition of five pure vanilla extracts, made from beans of different grades, is given in the following table, * the results being expressed in per cent. by weight:

Grade of Bean.	Specific Gravity.	Vanillin.	Alcohol.	Total Residue.	Cane-sugar.
Mexican (whole)	1.0159	0.125	37.96	22.60	19.90
Mexican (cut)	1.0146	0.065	39.92	23.10	19.20
South American (whole)	1.0109	0.215	38.58	22.00	19.00
Bourbon (whole)	1.0166	0.138	38.32	23.13	20.40
Tahiti (whole)	1.0104	0.108	38.84	21.75	20.00

The adulteration of vanilla extract consists principally in the use of extract of Tonka bean, a cheap substitute somewhat resembling vanilla in its flavor, in the use of artificial preparations of the active principles of vanilla and tonka, vanillin and coumarin, and in the addition of artificial color, usually caramel. A cheap extract may be entirely an artificial mixture, made of artificial vanillin or coumarin, or both, in weak alcohol, colored with caramel. An occasional adulteration is the use of alkali, such as potassium bicarbonate, to hold the resin in solution and permit the use of a more dilute alcohol.

Analytical Methods.—*Alcohol.*—Measure 25 c.c. of the sample, add 100 c.c. of water, and determine the alcohol by volume, as directed on page 217, omitting the use of sodium hydroxide or tannic acid.

Vanillin and Coumarin.—(Method of Hess and Prescott, modified by Winton and Bailey.†) Weigh 25 grams into a 200-c.c. beaker with marks showing volumes of 25 and 50 c.c. Dilute to the 50-c.c. mark and evaporate in a water-bath to

* *Conn. Agr. Exp. Sta. Report, 1901*, 150.

† *J. Am. Chem. Soc., 1905*, 719; *Bur. of Chem., Bull.* 107, 156.

25 c.c. at a temperature in the bath of not more than 70° C. Dilute a second time to 50 c.c. and evaporate to 25 c.c. Add neutral lead acetate solution drop by drop until no more precipitate forms. Stir with a glass rod to facilitate flocculation of the precipitate, filter through a moistened filter, and wash three times with hot water, taking care that the total filtrate does not measure more than 50 c.c. Cool the filtrate and shake with 20 c.c. of ether in a separatory funnel. Remove the ether to another separatory funnel and repeat the shaking of the aqueous liquid with ether three times, using 15 c.c. each time. Shake the combined ether solutions four or five times with 2 per cent. ammonium hydroxide, using 10 c.c. for the first shaking and 5 c.c. for each subsequent shaking. Set aside the combined ammoniacal solutions for the determination of vanillin.

Wash the ether solution into a weighed dish and allow the ether to evaporate at the room temperature. Dry in a desiccator, and weigh. Stir the residue for fifteen minutes with 15 c.c. of petroleum ether (boiling-point 30° to 40° C.) and decant the clear liquid into a beaker. Repeat the extraction with petroleum ether two or three times. Allow the residue to stand in the air until apparently dry, completing the drying in a desiccator. Weigh, and deduct the weight from the weight of the residue obtained after the ether evaporation, thus obtaining the weight of the coumarin.

Allow the petroleum ether extract to evaporate at room temperature. If it is coumarin it may be recognized by the characteristic odor, resembling that of "sweet grass," and by Leach's test * as follows: Dissolve the residue in a few drops of hot water, and add one or two drops of $\frac{N}{10}$ iodine in potassium

* Leach: "*Food Inspection and Analysis*," 738.

iodide. On stirring with a rod, a brown precipitate will form, which will gather into dark green flocks. The reaction is especially marked if carried out in a white porcelain crucible or dish.

Slightly acidulate the ammoniacal solution reserved for vanillin with 10 per cent. hydrochloric acid. Cool, and shake out in a separatory funnel with four portions of ether, as described for the first ether extraction. Evaporate the ether at room temperature in a weighed dish, dry over sulphuric acid, and weigh the vanillin.

If the residue is white it may be safely assumed in the majority of cases that it is pure vanillin. If dark colored, however, it should be purified as in the case of coumarin, and the percentage calculated from the *loss* in weight.

Notes.—The separation of vanillin and coumarin is based on the differences in their chemical constitution. Vanillin is hydroxymethoxybenzoic aldehyde, while coumarin is the anhydride of orthohydroxycinnamic acid. On account of the aldehydic nature of the vanillin the separation by dilute ammonia is possible, the aldehyde ammonia compound of vanillin being readily soluble in water, while the coumarin remains wholly in the ether.

Acetanilid has been reported in vanillin extracts, being present as an adulterant of the artificial vanillin employed, but its use is rare. If present, it will be found in the residue from the petroleum ether extraction and can be recognized by its melting-point, 112° C., and appropriate tests.

Resins.—Evaporate 25 or 50 c.c. of the extract to one-third its volume on the water-bath in order to remove the alcohol. Make up to the original volume with hot water. If no alkali has been used in the manufacture of the extract, the resin should appear at this point as a flocculent brown residue. Add acetic acid in slight excess, allow the evaporating-dish to stand

in a warm place for a time to separate the resin completely, and filter. Wash the residue on the filter, and save both the filtrate and residue. Test the resin by placing pieces of the filter, with the resin attached, in a few cubic centimeters of dilute caustic potash. The resin is dissolved with a deep red color, and on acidifying is again precipitated. Test the filtrate by adding to it a few drops of basic lead acetate. A bulky precipitate is formed, on account of the organic acid, gums, etc., present.

Confirm the resin test by shaking 5 c.c. portions of the extract in separate test-tubes with 10 c.c. of amyl alcohol and 10 c.c. of ether. With pure extracts the upper layers will be colored, varying from light yellow to deep brown; with artificial extracts, free from resin, the amyl alcohol and ether layers will be uncolored.

Note.—While the artificial vanillin, as sold on the market and used in the manufacture of low-grade extracts, is identical with the vanillin of the vanilla bean, it is true that pure extracts owe their value and flavor to other ingredients as well as to the vanillin present. Among these "extractive matters" the resins are important from an analytical standpoint, serving by their presence or absence to determine whether true vanilla is present or the extract entirely artificial. As a quick and ready test, serving to distinguish artificial extracts from genuine preparations of the vanilla bean, the amyl alcohol and ether tests will be found especially useful.

Color: Caramel.—Caramel is the color commonly used in vanilla extracts, although coal-tar dyes have been found. The presence of dyes is sometimes indicated by the color of the amyl alcohol in testing for the resin, they being in many cases soluble in amyl alcohol, but insoluble in ether. The two tests for caramel which in the author's experience have proven most satisfactory are the lead acetate test and the paraldehyde test.

Lead Acetate Test.—The coloring matter present in vanilla extracts is almost completely removed when the dealcoholized extract is treated with a few cubic centimeters of basic lead acetate solution. When caramel is present, the filtrate and precipitate, if any, have the characteristic red-brown color of caramel.

Paraldehyde Test.—To 15 c.c. of the extract add 2 c.c. of zinc chloride (5 per cent. solution), and 2 c.c. of caustic potash (2 per cent. solution). Filter, wash the precipitate with hot water, and dissolve it in 15 c.c. of acetic acid (10 per cent. solution). Concentrate on the water-bath to one-half or one-third its volume, neutralize the excess of acid, and transfer the clear solution to a rather large test-tube. Add three volumes of paraldehyde and just enough alcohol to make the mixture homogeneous. If caramel is present a brown flocculent precipitate will form on standing over night.

Note.—The treatment with zinc hydroxide is to separate the caramel from sugar, which is present in many extracts, and interferes with the paraldehyde test.* The precipitate obtained with paraldehyde is probably caramel and not the product of a chemical reaction.

LEMON.

Lemon extract is usually made by dissolving oil of lemon, obtained by expression or distillation from the rind of the lemon, in strong alcohol. The product is sometimes colored with the color of lemon peel. The Federal standards † require a content of lemon oil of at least 5 per cent. by volume. The expensive ingredient of the extract is the alcohol, since alcohol of at least 80 per cent. strength by volume must be used to dissolve 5 per cent. of lemon oil; hence in making cheap extracts

* Woodman and Newhall: *Tech. Quart.*, 21, 280.

† U. S. Dept. Agric., Office of the Secretary, Circ. 19.

the manufacturer endeavors to use a dilute alcohol, even under the necessity of omitting a portion or all of the oil of lemon.

The common forms of adulteration of lemon extract are the use of weak alcohol and consequent deficiency of lemon oil, as already noted; the substitution for the lemon oil of small amounts of stronger oils, as oil of citronella, oil of lemon-grass, and the like; the use of *citral*, the odorous principle of lemon oil, used for making the so-called "terpeneless lemon extracts;" and the coloring of the extracts by coal-tar colors or turmeric.

Preliminary Test.—To a little of the extract in a test-tube add seven or eight times its volume of water. A high-grade extract will show a heavy cloud, due to the precipitation of the lemon oil. If no cloudiness or turbidity appears it may be safely inferred that no oil is present.

Alcohol.—The determination of alcohol is somewhat complicated in this case by the presence of the volatile oil of lemon which must be removed before distilling.

Dilute 20 c.c. of the extract to 100 c.c. with water, and pour the mixture into a dry Erlenmeyer flask containing 5 grams of light magnesium carbonate. Shake thoroughly and filter through a dry filter. Measure 50 c.c. of the clear filtrate, add about 15 c.c. of water, and distil 50 c.c., as directed on page 217. From the specific gravity of the distillate determine the per cent. of alcohol by volume, and this, multiplied by 5, will give the percentage in the original extract.

Note.—The magnesia serves to absorb the precipitated oil and prevent it from passing through the filter.

Lemon Oil.—Pipette 20 c.c. of the extract into a Babcock milk bottle; add 1 c.c. dilute hydrochloric acid (1:1); then add from 25 to 28 c.c. of water previously warmed to 60° C.; mix and let stand in water at 60° for five minutes; whirl in centrifuge for five minutes; fill with warm water to bring the oil into the graduated neck of the flask; repeat whirling for

two minutes; stand the flask in water at 60° C. for a few minutes and read the per cent. of oil by volume. If the determination is not made in duplicate the flask should be balanced by another containing an equal weight of water. In case oil of lemon is present in amounts over 2 per cent. add to the percentage of oil found 0.4 per cent. to correct for the oil retained in solution. If less than 2 per cent. and more than 1 per cent. is present, add 0.3 per cent. for correction.

Refractive Index of the Oil.—With a narrow glass tube remove a few drops of the oil obtained in the neck of the Babcock flask in the previous determination and determine its index of refraction at 25°, using the Abbé refractometer. The reading for pure lemon oil at 25° is 1.4715–1.4740. Most of the adulterants give a higher refractive index; oil of turpentine is distinctly lower.

Color.—Test for coal-tar colors by evaporating a portion of the extract to dryness on the water-bath. Dissolve the residue in water and carry out the double dyeing method, as described on page 221.

To test for turmeric add to a portion of the sample three drops of saturated boric acid solution, *one small drop* of dilute (1:10) hydrochloric acid, and a piece of filter-paper so arranged that it is only half immersed in the liquid. Evaporate to dryness on the water-bath. In the presence of turmeric the paper will be colored pink and the test may be confirmed as described on page 188. Excess of hydrochloric acid should be avoided, as in testing for boric acid.

Citral.—See *J. Am. Chem. Soc.*, 1906, 1472.

APPENDICES.

APPENDIX A.

TABLE I.

TENSION OF AQUEOUS VAPOR IN MILLIMETERS OF MERCURY FROM 0° TO 30°.9 C., REDUCED TO 0° AND SEA-LEVEL.

	0°.0.	0°.1.	0°.2.	0°.3.	0°.4.	0°.5.	0°.6.	0°.7.	0°.8.	0°.9.
0°	4.57	4.60	4.64	4.67	4.70	4.74	4.77	4.80	4.84	4.87
1	4.91	4.94	4.98	5.02	5.05	5.09	5.12	5.16	5.20	5.23
2	5.27	5.31	5.35	5.39	5.42	5.46	5.50	5.54	5.58	5.62
3	5.66	5.70	5.74	5.78	5.82	5.86	5.90	5.94	5.99	6.03
4	6.07	6.11	6.15	6.20	6.24	6.28	6.33	6.37	6.42	6.46
5	6.51	6.55	6.60	6.64	6.69	6.74	6.78	6.83	6.88	6.92
6	6.97	7.02	7.07	7.12	7.17	7.22	7.26	7.31	7.36	7.42
7	7.47	7.52	7.57	7.62	7.67	7.72	7.78	7.83	7.88	7.94
8	7.99	8.05	8.10	8.15	8.21	8.27	8.32	8.38	8.43	8.49
9	8.55	8.61	8.66	8.72	8.78	8.84	8.90	8.96	9.02	9.08
10	9.14	9.20	9.26	9.32	9.39	9.45	9.51	9.58	9.64	9.70
11	9.77	9.83	9.90	9.96	10.03	10.09	10.16	10.23	10.30	10.36
12	10.43	10.50	10.57	10.64	10.71	10.78	10.85	10.92	10.99	11.06
13	11.14	11.21	11.28	11.36	11.43	11.50	11.58	11.66	11.73	11.81
14	11.88	11.96	12.04	12.12	12.19	12.27	12.35	12.43	12.51	12.59
15	12.67	12.76	12.84	12.92	13.00	13.09	13.17	13.25	13.34	13.42
16	13.51	13.60	13.68	13.77	13.86	13.95	14.04	14.12	14.21	14.30
17	14.40	14.49	14.58	14.67	14.76	14.86	14.95	15.04	15.14	15.23
18	15.33	15.43	15.52	15.62	15.72	15.82	15.92	16.02	16.12	16.22
19	16.32	16.42	16.52	16.63	16.73	16.83	16.94	17.04	17.15	17.26
20	17.36	17.47	17.58	17.69	17.80	17.91	18.02	18.13	18.24	18.35
21	18.47	18.58	18.69	18.81	18.92	19.04	19.16	19.27	19.39	19.51
22	19.63	19.75	19.87	19.99	20.11	20.24	20.36	20.48	20.61	20.73
23	20.86	20.98	21.11	21.24	21.37	21.50	21.63	21.76	21.89	22.02
24	22.15	22.29	22.42	22.55	22.69	22.83	22.96	23.10	23.24	23.38
25	23.52	23.66	23.80	23.94	24.08	24.23	24.37	24.52	24.66	24.81
26	24.96	25.10	25.25	25.40	25.55	25.70	25.86	26.01	26.16	26.32
27	26.47	26.63	26.78	26.94	27.10	27.26	27.42	27.58	27.74	27.90
28	28.07	28.23	28.39	28.56	28.73	28.89	29.06	29.23	29.40	29.57
29	29.74	29.92	30.09	30.26	30.44	30.62	30.79	30.97	31.15	31.33
30	31.51	31.69	31.87	32.06	32.24	32.43	32.61	32.80	32.99	33.18

TABLE II.

WEIGHT OF A CUBIC CENTIMETER OF CARBON DIOXIDE FROM 746 TO 778 MILLIMETERS PRESSURE AND FROM 10° TO 25° C. CORRECTED FOR THE TENSION OF AQUEOUS VAPOR.

(Extended from the Tables of Dietrich.*)

	Millimeters.																	
	746	748	750	752	754	756	758	760	762	764	766	768	770	772.½	774	776	778	
10°	1.83936	1.84435	1.84934	1.85433	1.85933	1.86432	1.86931	1.87430	1.87930	1.88429	1.88928	1.89427	1.89926	1.90425	1.90924	1.91423	1.91922	10°
11	1.83134	1.83631	1.84129	1.84626	1.85123	1.85621	1.86118	1.86616	1.87113	1.87610	1.88108	1.88605	1.89103	1.89601	1.90098	1.90596	1.91094	11
12	1.82324	1.82820	1.83315	1.83811	1.84307	1.84802	1.85298	1.85793	1.86289	1.86785	1.87280	1.87776	1.88271	1.88767	1.89263	1.89758	1.90253	12
13	1.81521	1.82015	1.82510	1.83004	1.83499	1.83993	1.84488	1.84982	1.85477	1.85971	1.86466	1.86960	1.87455	1.87950	1.88444	1.88939	1.89434	13
14	1.80714	1.81208	1.81701	1.82194	1.82687	1.83181	1.83674	1.84167	1.84661	1.85154	1.85647	1.86141	1.86634	1.87127	1.87620	1.88113	1.88607	14
15	1.79880	1.80371	1.80861	1.81352	1.81843	1.82333	1.82824	1.83314	1.83805	1.84296	1.84786	1.85277	1.85767	1.86257	1.86748	1.87239	1.87729	15
16	1.79056	1.79545	1.80034	1.80523	1.81012	1.81501	1.81990	1.82479	1.82968	1.83457	1.83946	1.84435	1.84924	1.85413	1.85902	1.86391	1.86880	16
17	1.78216	1.78703	1.79189	1.79676	1.80163	1.80650	1.81136	1.81623	1.82110	1.82596	1.83083	1.83570	1.84056	1.84543	1.85030	1.85516	1.86003	17
18	1.77381	1.77867	1.78353	1.78838	1.79324	1.79809	1.80295	1.80781	1.81266	1.81752	1.82337	1.82723	1.83209	1.83694	1.84180	1.84666	1.85151	18
19	1.76530	1.77014	1.77498	1.77982	1.78466	1.78950	1.79434	1.79917	1.80401	1.80885	1.81369	1.81853	1.82337	1.82821	1.83305	1.83789	1.84273	19
20	1.75681	1.76113	1.76645	1.77127	1.77610	1.78092	1.78574	1.79056	1.79538	1.80021	1.80503	1.80985	1.81467	1.81949	1.82432	1.82914	1.83396	20
21	1.74818	1.75299	1.75780	1.76260	1.76741	1.77221	1.77702	1.78183	1.78663	1.79144	1.79624	1.80105	1.80586	1.81066	1.81547	1.82028	1.82508	21
22	1.73949	1.74428	1.74907	1.75386	1.75865	1.76344	1.76823	1.77302	1.77781	1.78260	1.78739	1.79218	1.79697	1.80176	1.80655	1.81134	1.81613	22
23	1.73068	1.73546	1.74023	1.74501	1.74978	1.75455	1.75933	1.76410	1.76888	1.77365	1.77842	1.78320	1.78797	1.79274	1.79752	1.80229	1.80706	23
24	1.72178	1.72654	1.73129	1.73605	1.74081	1.74556	1.75032	1.75508	1.75984	1.76459	1.76935	1.77411	1.77886	1.78362	1.78838	1.79314	1.79789	24
25	1.71277	1.71751	1.72225	1.72699	1.73173	1.73648	1.74122	1.74596	1.75070	1.75544	1.76018	1.76492	1.76967	1.77441	1.77915	1.78389	1.78863	25

* *Ztschr. anal. Chem.*, 4 (1865), 141.

TABLE III.

TABLE OF AVERAGE COMPOSITION OF WATERS. BASED ON MASSACHUSETTS DATA.

(Parts per Million.)

Class.	Turbidity and Sediment.	Odor.	Color.	Alb. Ammonia.	Free Ammonia.	Nitrites.	Nitrates.	Chlorine.	Hardness.	Total Solids.
Meteoric water (rain and snow).....	Slight to considerable.	None to tarry.	0.00 to 0.10	.010 to .150	.100 to .400	.000 to .003	.000 to .050	0.3 to 3.0	0.0	2.0 to 10.0
Water of brooks and ponds.....	"	Vegetable to grassy.	0.10 to 2.00	.100 to .400	.000 to .020	.000 to .002	.000 to .100	1.0 to 6.0	0.0 to 20.0	20.0 to 30.0
Unpolluted springs or ground-waters.	None.	None.	0.00	.000 to .010	.000	.000	.100 to .400	1.0 to 6.0	3.0 to 25.0	20.0 to 40.0
Sewage.....	Decided milky to thick dirty.	Offensive.	0.3 to 0.7	1.50 to 4.50	10.000 to 20.000	.000 to .500	.000 to .100	30.0 to 60.0	30.0 to 50.0	250.0 to 450.0
Sand-filtered effluent	None.	None.	0.00	.020 to .100	.000 to .050	.000 to .002	5.000 to 15.000	30.0 to 60.0	35.0 to 55.0	150.0 to 250.0
Polluted rivers.....	Distinct to decided.	Musty to offensive.	0.4	.286 to 1.200	.210 to .500	.010 to .060	.300 to .550	9 7 to 18.0	40.0 to 50.0	77.0 to 90.0
SPECIAL EXAMPLES.										
Polluted wells, No. 1.	None.	None.	0.00	.034	.182	.004	10.000	31.4	94.0	279.0
" " " 2.	"	Dist. mouldy.	0.00	.080	5.760	.020	7.000	28.1	36.0	166.0
" " " 3.	Milky.	Dec. musty and disagreeable.	0.10	.220	16.800	.001	.250	14.4	25.0	120.0
Purified ground-waters, No. 1.....	None.	None.	0.00	.062	.000	.000	16.665	29.0	91.0	224.0
Purified ground-waters, No. 2.....	"	"	0.00	.004	.000	.000	5.000	20.0	130.0	250.0

TABLE IV.

NORMAL WATERS FROM VARIOUS PARTS OF NORTH AMERICA.

(Parts per Million.)

No.		Color.	Total Residue	Ammonia.		Nitrogen as		Chlorine.	Hardness.	Ox. Cons.	Iron.
				Albuminoid.	Free.	Nitrites	Nitrates				
1	Brook, Nova Scotia	2.20	58.0	.262	.012	.000	.020	.....	6.0	.....	.....
2	Spring, off coast of Maine	0.0	111.0	.018	.000	.000	.380	16.7	50.0	.234	.....
3	" Mooselauke, N. H	0.0	25.5	.034	.000	.000	.010	0.5	13.0	.....	.....
4	Small stream, Vermont	.05	188.5	.040	.016	.000	.030	0.8	191.0	.780	.....
5	Cistern, Massachusetts	.05	30.5	.136	.032	.000	.030	2.5	17.0	.....	.....
6	Driven well, coast of Massachusetts	1.2	110.0	.120	.380	.001	.000	24.0	50.0	1.026	1.63
7	" " " " "	0.5	54.0	.028	.002	.000	.000	4.7	28.0	.390	.....
8	Spring, Central Massachusetts	0.0	54.0	.004	.000	.000	.020	1.8	22.0	.000	.....
9	Small stream, New York	.42	31.5	.070	.000	.000	.070	0.8	6.0	.....	.....
10	Lake, Adirondack Mts	.12	24.0	.064	.000	.000	.000	0.4	15.0	.....	.....
11	Reservoir, Newark, N. J	.18	47.0	.116	.002	.001	.200	2.0	24.0	.....	.....
12	Driven well, South Carolina	0.0	55.0	.046	.010	.000	.600	2.2	17.0	.....	.....
13	Spring, Georgia	.15	123.0	.052	.014	.001	.100	1.8	112.0	.....	.....
14	Mississippi River, in Missouri	.25	filtered 24.8	.546	.008	.010	.580	7.3	113.0	.....	.....
15	Deep well near Lake Superior	0.0	186.0	.006	.200	.000	.030	54.0	80.0	.....	.....
16	Missouri River, in Montana	.08	261.0	.020	.008	.000	.130	13.5	154.0	.....	.....
17	River Sac, Missouri	.05	210.0	.070	.032	.007	.500	2.0	156.0	.....	.....
18	Assiniboine, Winnipeg	.08	586.0	.206	.000	.000	.000	24.5	406.0	.....	.....
19	Deep well, Lake Winnipeg	0.0	1070.0	.034	.000	.001	1.600	234.2	550.0	.....	.....
20	" " Texas	0.0	566.0	.020	.194	.000	.000	101.0	22.0	.....	.....
21	Cistern, Jamaica	.33	.....	.040	.012	.000	.100	1.4	5.4	.....	.....

TABLE V.

SEWAGE AND POLLUTED WATERS FROM VARIOUS PARTS OF NORTH AMERICA.

(Parts per Million.)

No.		Color.	Total Residue.	Ammonia.		Nitrogen as		Chlorine.	Hardness.	Ox. Cons.
				Albuminoid.	Free.	Nitrites.	Nitrates.			
1	Illinois and Michigan Canal, Lockport, Ill. (Streams Examination, Chicago, 1903.)	.....	630.00	3.600	16.000	.000	.100	93.9	.....	.....
2	Desplaines River, South Joliet. (Streams Examination, Chicago, 1903.)	0.15	282.	.960	3.000	.072	.050	30.5	.....	9.9
3	Illinois River at Morris. (Chem. Survey of Waters of Illinois, 1897–1902.)	.....	679.02	2.400	9.200	.060	.350	92.0	.....	29.5
4	Illlnois River at Beardstown. (Streams Examination, Chicago, 1903.)	0.23	392.0	.408	2.800	.046	2.000	28.0	.....	6.8
5	Mississippi River, New Orleans. (Report on Water and Sewerage, New Orleans, 1903.)	.....	580.0	.290	.013	.023	.560	7.5	.....	8.8
6	Ohio River. (Investigations into the Purification of the Ohio River for City of Cincinnati, 1899.)	0.08	1057.0	.746	.018	.004	1.020	6.0	.....	14.3
7	Inlet to Easton's Pond. (Board of Health, Newport, R. I.)	1.000	121.0	.790	.520	.066	.500	12.2	25.0	10.8
8	Port Townsend, Glendale Dairy. (Washington Geol. Survey, Vol. I, Part V.)	Clear	239.0	.187	.200	.000	6.940	46.7	146.4	.....
9	Parral. From Carafe on Table. (Potable Waters of Mexico. Trans. Amer Inst Mining Engineers, Nov. 1901.)	0.00	566.0	.080	.000	.040	15.000	89.7	224.0	.....
10	Well-McConway-Torley Mfg. Co., Pittsburg. (Filtration Commission, Pittsburg, 1899.)	1.50	320.0	.124	.018	.000	1.500	30.1	160.0	.....
11	Well, Sligo Mills, Pittsburg. (Filtration Commission, Pittsburg, 1899.)	.....	306.0	.110	.230	.040	.000	18.4	144.9	.....

TABLE V—*Continued.*

SEWAGE AND POLLUTED WATERS.

(Parts per Million.)

No.		Color.	Total Residue.	Ammonia.		Nitrogen as		Chlorine.	Hardness	Ox. Cons.
				Albuminoid.	Free.	Nitrites.	Nitrates.			
1	Sewage, Manufacturing city		663.0	7.60	55.00	.000	.000	93.5		71 00
2	" small town		480.0	4.60	16.40	.160	1.220	55.8		56.00
3	" dilute		290.0	2.960	6.400	.640	.020	37.2		27.80
4	Brook, Massachusetts			.154	.034	.030	2.750	15.6	50.0	
5	River, Massachusetts		73.9	.214	.873	.002		5.2		
6	Brook, below filter-beds	.25	221.7	.262	3.547	.209	3.127	46.7	53.0	4.30
7	Well, coast Mass., May	0.0		.044	.056	.001	1.750	44.0	32.0	
8	" " " July	0.0		.040	.394	.150	10.00	54.0	35.0	
9	Well, Newport, R. I	0.0	150.0	.004	.004	.000	3.900	26.0	57.0	.000
10	" Essex, Mass	.02	583.0	.100	.032	.005	3.500	110.0	194.4	
11	" Framingham, Mass	0.0	691.0	.080	.930	.010	50.00	72.2	172.2	
12	" Roxbury, Mass	.16	972 0	.104	.068	.027	46.00	108.6	225.2	4.130

TABLE VI.

MINERAL CONTENTS OF SOME NATURAL WATERS.

(Parts per Million.)

No.	Locality.	Total Solids	Na_2O	CaO	MgO	Fe_2O_3	SiO_2	CO_2	Cl	SO_3	Remarks.
	MASSACHUSETTS SAMPLES—WELLS.										
1	Mansfield	27.3		3.06	.954	.014	8 9		2.6	1.31	Normal ground-water.
2	Framingham	72.3		13.41	3.32	0.0	9.9		21.3	4.24	Near sewage field.
3	Hyde Park	89.50		10.40	2.61	.705	8.33		11.4	3.88	Potassium and lithium present. Imperf. nat. filtration.
4	Marblehead	549.4		85.10	38.60	.107	16.60		145.3	29.80	Near the sea.
	WATERS OF THE ALKALI BELT.										
5	Hunter Well, S. D.	2056.5	942.0	11.0	445.0	12.8	17.6	147.5	465.3	525.6	Used four years without harm.
6	Redstone Well, S. D	2014.4	297.7	387.8	155.4	3.0	12.4	63.6	115.8	1006.8	Used with marked success in irrigation.
7	Amsden, S. D	789.6	21.4	206.4	90.6	11.0	46.8	112.8	2.2	295.6	Does not foam in boilers.
8	Sanborn Co., S. D	1714 0	231.8	382.8	89 6	24.6	50.0	82.7	68.1	797.4	Stock relish this water.

TABLE VII.

TABLE OF HARDNESS, SHOWING THE PARTS OF CALCIUM CARBONATE ($CaCO_3$) IN 1,000,000 FOR EACH TENTH OF A CUBIC CENTIMETER OF SOAP SOLUTION USED.

	0.0 cu. cm.	0.1 cu. cm.	0.2 cu. cm.	0.3 cu. cm.	0.4 cu. cm.	0.5 cu. cm.	0.6 cu. cm.	0.7 cu. cm.	0.8 cu. cm.	0.9 cu. cm.
0.0								0.0	1.6	3.2
1.0	4.8	6.3	7.9	9.5	11.1	12.7	14.3	15.6	16.9	18.2
2.0	19.5	20.8	22.1	23.4	24.7	26.0	27.3	28.6	29.9	31.2
3.0	32.5	33.8	35.1	36.4	37.7	39.0	40.3	41.6	42.9	44.3
4.0	45.7	47.1	48.6	50.0	51.4	52.9	54.3	55.7	57.1	58.6
5.0	60.0	61.4	62.9	64.3	65.7	67.1	68.6	70.0	71.4	72.9
6.0	74.3	75.7	77.1	78.6	80.0	81.4	82.9	84.3	85.7	87.1
7.0	88.6	90.0	91.4	92.9	94.3	95.7	97.1	98.6	100.0	101.5
8.0	103.0	104.5	106.0	107.5	109.0	110.5	112.0	113.5	115.0	116.5
9.0	118.0	119.5	121.1	122.6	124.1	125.6	127.1	128.6	130.1	131.6
10.0	133.1	134.6	136.1	137.6	139.1	140.6	142.1	143.7	145.2	146.8
11.0	148.4	150.0	151.6	153.2	154.8	156.3	157.9	159.5	161.1	162.7
12.0	164.3	165.9	167.5	169.0	170.6	172.2	173.8	175.4	177.0	178.6
13.0	180.2	181.7	183.3	184.9	186.5	188.1	189.7	191.3	192.9	194.4
14.0	196.0	197.6	199.2	200.8	202.4	204.0	205.6	207.1	208.7	210.3
15.0	211.9	213.5	215.1	216.8	218.5	220.2	221.8	223.5	225.2	226.9

TABLE VIII.

SHOWING THE NUMBER OF CUBIC CENTIMETERS OF OXYGEN DISSOLVED IN 1000 CUBIC CENTIMETERS OF WATER WHEN SATURATED AT DIFFERENT TEMPERATURES, AS CALCULATED BY WINKLER.*

Deg. Cent.	Cu. Cm.	Deg. Cent.	Cu. Cm.	Deg. Cent.	Cu. Cm.
0	10.187	11	7.692	21	6.233
1	9.910	12	7.518	22	6.114
2	9.643	13	7.352	23	5.999
3	9.387	14	7.192	24	5.886
4	9.142	15	7.038	25	5.776
5	8.907	16	6.891	26	5.669
6	8.682	17	6.750	27	5.564
7	8.467	18	6.614	28	5.460
8	8.260	19	6.482	29	5.357
9	8.063	20	6.356	30	5.255
10	7.873				

* *Berichte*, **22** (*1889*), 1772.

TABLE IX.

FOR CORRECTING THE SPECIFIC GRAVITY OF MILK ACCORDING TO TEMPERATURE. ADAPTED FROM THE TABLE OF VIETH.

(Temperature in Degrees Centigrade.)

Specific Gravity.	10°	11°	12°	13°	14°	15°	16°	17°	18°	19°	20°
1.025	24.1	24.3	24.5	24.6	24.7	24.9	25.1	25.3	25.4	25.6	25.9
26	25.1	25.2	25.4	25.5	25.7	25.9	26.1	26.3	26.5	26.7	27.0
27	26.1	26.2	26.4	26.5	26.7	26.9	27.1	27.4	27.5	27.7	28.0
28	27.0	27.2	27.4	27.5	27.7	27.9	28.1	28.4	28.5	28.7	29.0
29	28.0	28.2	28.4	28.5	28.7	28.9	29.1	29.4	29.5	29.8	30.1
30	29.0	29.1	29.3	29.5	29.7	29.9	30.1	30.4	30.5	30.8	31.1
31	29.9	30.1	30.3	30.4	30.6	30.9	31.2	31.4	31.5	31.8	32.2
32	30.9	31.1	31.3	31.4	31.6	31.9	32.2	32.4	32.6	32.9	33.2
33	31.8	32.0	32.3	32.4	32.6	32.9	33.2	33.4	33.6	33.9	34.2
34	32.7	33.0	33.2	33.4	33.6	33.9	34.2	34.4	34.6	34.9	35.2
35	33.6	33.9	34.1	34.4	34.6	34.9	35.2	35.4	35.6	35.9	36.2

Directions.—Find the observed gravity in the left-hand column. Then in the same line, and under the observed temperature, will be found the corrected reading.

TABLE X.

PERCENTAGE OF ALCOHOL FROM THE SPECIFIC GRAVITY AT 15°.5 C. (HEHNER.)

Sp. Gr. 15°.5 C.	Percent Alcohol by Weight.	Per cent Alcohol by Volume.	Sp. Gr. 15°.5 C.	Per cent Alcohol by Weight.	Per cent Alcohol by Volume.	Sp. Gr. 15°.5 C.	Per cent Alcohol by Weight.	Per cent Alcohol by Volume.
1.0000	0.00	0.00						
0.9999	0.05	0.07	0.9959	2.33	2.93	0.9919	4.69	5.86
8	0.11	0.13	8	2.39	3.00	8	4.75	5.94
7	0.16	0.20	7	2.44	3.07	7	4.81	6.02
6	0.21	0.26	6	2.50	3.14	6	4.87	6.10
5	0.26	0.33	5	2.56	3.21	5	4.94	6.17
4	0.32	0.40	4	2.61	3.28	4	5.00	6.24
3	0.37	0.46	3	2.67	3.35	3	5.06	6.32
2	0.42	0.53	2	2.72	3.42	2	5.12	6.40
1	0.47	0.60	1	2.78	3.49	1	5.19	6.48
0	0.53	0.66	0	2.83	3.55	0	5.25	6.55
0.9989	0.58	0.73	0.9949	2.89	3.62	0.9909	5.31	6.63
8	0.63	0.79	8	2.94	3.69	8	5.37	6.71
7	0.68	0.86	7	3.00	3.76	7	5.44	6.78
6	0.74	0.93	6	3.06	3.83	6	5.50	6.86
5	0.79	0.99	5	3.12	3.90	5	5.56	6.94
4	0.84	1.06	4	3.18	3.98	4	5.62	7.01
3	0.89	1.13	3	3.24	4.05	3	5.69	7.09
2	0.95	1.19	2	3.29	4.12	2	5.75	7.17
1	1.00	1.26	1	3.35	4.20	1	5.81	7.25
0	1.06	1.34	0	3.41	4.27	0	5.87	7.32
0.9979	1.12	1.42	0.9939	3.47	4.34	0.9899	5.94	7.40
8	1.19	1.49	8	3.53	4.42	8	6.00	7.48
7	1.25	1.57	7	3.59	4.49	7	6.07	7.57
6	1.31	1.65	6	3.65	4.56	6	6.14	7.66
5	1.37	1.73	5	3.71	4.63	5	6.21	7.74
4	1.44	1.81	4	3.76	4.71	4	6.28	7.83
3	1.50	1.88	3	3.82	4.78	3	6.36	7.92
2	1.56	1.96	2	3.88	4.85	2	6.43	8.01
1	1.62	2.04	1	3.94	4.93	1	6.50	8.10
0	1.69	2.12	0	4.00	5.00	0	6.57	8.18
0.9969	1.75	2.20	0.9929	4.06	5.08	0.9889	6.64	8.27
8	1.81	2.27	8	4.12	5.16	8	6.71	8.36
7	1.87	2.35	7	4.19	5.24	7	6.78	8.45
6	1.94	2.43	6	4.25	5.32	6	6.86	8.54
5	2.00	2.51	5	4.31	5.39	5	6.93	8.63
4	2.06	2.58	4	4.37	5.47	4	7.00	8.72
3	2.11	2.62	3	4.44	5.55	3	7.07	8.80
2	2.17	2.72	2	4.50	5.63	2	7.13	8.88
1	2.22	2.79	1	4.56	5.71	1	7.20	8.96
0	2.28	2.86	0	4.62	5.78	0	7.27	9.04

TABLE X.—*Continued.*

PERCENTAGE OF ALCOHOL.

Sp. Gr. 15°.5 C.	Per cent Alcohol by Weight.	Per cent Alcohol by Volume.	Sp. Gr. 15°.5 C.	Per cent Alcohol by Weight.	Per cent Alcohol by Volume.	Sp. Gr. 15°.5 C.	Per cent Alcohol by Weight.	Per cent Alcohol by Volume.
0.9879	7.33	9.13	4	10.54	13.05	0.9789	14.00	17.26
8	7.40	9.21	3	10.62	13.15	8	14.09	17.37
7	7.47	9.29	2	10.69	13.24	7	14.18	17.48
6	7.53	9.37	1	10.77	13.34	6	14.27	17.59
5	7.60	9.45	0	10.85	13.43	5	14.36	17.70
4	7.67	9.54				4	14.45	17.81
3	7.73	9.62	0.9829	10.92	13.52	3	14.55	17.92
2	7.80	9.70	8	11.00	13.62	2	14.64	18.03
1	7.87	9.78	7	11.08	13.72	1	14.73	18.14
0	7.93	9.86	6	11.15	13.81	0	14.82	18.25
			5	11.23	13.90			
0.9869	8.00	9.95	4	11.31	13.99	0.9779	14.90	18.36
8	8.07	10.03	3	11.38	14.09	8	15.00	18.48
7	8.14	10.12	2	11.46	14.18	7	15.08	18.58
6	8.21	10.21	1	11.54	14.27	6	15.17	18.68
5	8.29	10.30	0	11.62	14.37	5	15.25	18.78
4	8.36	10.38				4	15.33	18.88
3	8.43	10.47	0.9819	11.69	14.46	3	15.42	18.98
2	8.50	10.56	8	11.77	14.56	2	15.50	19.08
1	8.57	10.65	7	11.85	14.65	1	15.58	19.18
0	8.64	10.73	6	11.92	14.74	0	15.67	19.28
			5	12.00	14.84			
0.9859	8.71	10.82	4	12.08	14.93	0.9769	15.75	19.39
8	8.79	10.91	3	12.15	15.02	8	15.83	19.49
7	8.86	11.00	2	12.23	15.12	7	15.92	19.59
6	8.93	11.08	1	12.31	15.21	6	16.00	19.68
5	9.00	11.17	0	12.38	15.30	5	16.08	19.78
4	9.07	11.26				4	16.15	19.87
3	9.14	11.35	0.9809	12.46	15.40	3	16.23	19.96
2	9.21	11.44	8	12.54	15.49	2	16.31	20.06
1	9.29	11.52	7	12.62	15.58	1	16.38	20.15
0	9.36	11.61	6	12.69	15.68	0	16.46	20.24
			5	12.77	15.77			
0.9849	9.43	11.70	4	12.85	15.86	0.9759	16.54	20.33
8	9.50	11.79	3	12.92	15.96	8	16.62	20.43
7	9.57	11.87	2	13.00	16.05	7	16.69	20.52
6	9.64	11.96	1	13.08	16.15	6	16.77	20.61
5	9.71	12.05	0	13.15	16.24	5	16.85	20.71
4	9.79	12.13				4	16.92	20.80
3	9.86	12.22	0.9799	13.23	16.33	3	17.00	20.89
2	9.93	12.31	8	13.31	16.43	2	17.08	20.99
1	10.00	12.40	7	13.38	16.52	1	17.17	21.09
0	10.08	12.49	6	13.46	16.61	0	17.25	21.19
			5	13.54	16.70			
0.9839	10.15	12.58	4	13.62	16.80	0.9749	17.33	21.29
8	10.23	12.68	3	13.69	16.89	8	17.42	20.39
7	10.31	12.77	2	13.77	16.98	7	17.50	21.49
6	10.38	12.87	1	13.85	17.08	6	17.58	21.59
5	10.46	12.96	0	13.92	17.17	5	17.67	21.69

TABLE X.—*Continued.*

PERCENTAGE OF ALCOHOL.

Sp. Gr. 15°.5 C.	Per cent Alcohol by Weight.	Per cent Alcohol by Volume.	Sp. Gr. 15°.5 C.	Per cent Alcohol by Weight.	Per cent Alcohol by Volume.	Sp. Gr. 15°.5 C.	Per cent Alcohol by Weight.	Per cent Alcohol by Volume.
4	17.75	21.79	4	20.17	24.68	4	22.54	27.49
3	17.83	21.89	3	20.25	24.78	3	22.62	27.59
2	17.92	21.99	2	20.33	24.88	2	22.69	27.68
1	18.00	22.09	1	20.42	24.98	1	22.77	27.77
0	18.08	22.18	0	20.50	25.07	0	22.85	27.86
0.9739	18.15	22.27	**0.9709**	20.58	25.17	**0.9679**	22.92	27.95
8	18.23	22.36	8	20.67	25.27	8	23.00	28.04
7	18.31	22.46	7	20.75	25.37	7	23.08	28.13
6	18.38	22.55	6	20.83	25.47	6	23.15	28.22
5	18.46	22.64	5	20 92	25.57	5	23.23	28.31
4	18.54	22.73	4	21.00	25.67	4	23.31	28.41
3	18.62	22.82	3	21.08	25 76	3	23.38	28.50
2	18.69	22.92	2	21.15	25.86	2	23.46	28.59
1	18.77	23 01	1	21.23	25.95	1	23.54	28.68
0	18.85	23.10	0	21.31	26.04	0	23.62	28.77
0.9729	18 92	23.19	**0.9699**	21.38	26.13	**0.9669**	23.69	28.86
8	19 00	23.28	8	21.46	26.22	8	23.77	28.95
7	19.08	23.38	7	21.54	26.31	7	23.85	29.04
6	19 17	23.48	6	21.62	26.40	6	23.92	29.13
5	19.25	23.58	5	21.69	26.49	5	24.00	29.22
4	19.33	23.68	4	21.77	26.58	4	24.08	29.31
3	19.42	23.78	3	21.85	26.67	3	24.15	29.40
2	19.50	23.88	2	21.92	26.77	2	24.23	29.49
1	19.58	23.98	1	22.00	26.86	1	24.31	29.58
0	19.67	24.08	0	22.08	26.95	0	24.38	29.67
0.9719	19.75	24.18	**0.9689**	22.15	27.04	**0.9659**	24.46	29.76
8	19.83	24.28	8	22.23	27.13	8	24.54	29.86
7	19.92	24.38	7	22.31	27.22	7	24.62	29.95
6	20.00	24.48	6	22.38	27.31	6	24.69	30.04
5	20 08	24.58	5	22.46	27.40	5	24.77	30.13
						4	24.85	30.22
						3	24.92	30.31
						2	25.00	30.40

TABLE XI.

EXTRACT IN WINE.

PER CENT BY WEIGHT.

[According to Windisch.]

Sp. Gr.	Extract.	Sp. Gr.	Extract.	Sp. Gr.	Extract.	Sp. Gr.	Extract.	Sp. Gr.	Extract.	Sp. Gr.	Extract.
1.0000	0.00	1.0200	5.17	1.0400	10.35	1.0600	15.55	1.0800	20.78	1.1000	26.04
1.0005	0.13	1.0205	5.30	1.0405	10.48	1.0605	15.68	1.0805	20.91	1.1005	26.17
1.0010	0.26	1.0210	5.43	1.0410	10.61	1.0610	15.81	1.0810	21.04	1.1010	26.30
1.0015	0.39	1.0215	5.56	1.0415	10.74	1.0615	15.94	1.0815	21.17	1.1015	26.43
1.0020	0.52	1.0220	5.69	1.0420	10.87	1.0620	16.07	1.0820	21.31	1.1020	26.56
1.0025	0.64	1.0225	5.82	1.0425	11.00	1.0625	16.21	1.0825	21.44	1.1025	26.70
1.0030	0.77	1.0230	5.94	1.0430	11.13	1.0630	16.33	1.0830	21.57	1.1030	26.83
1.0035	0.90	1.0235	6.07	1.0435	11.26	1.0635	16.47	1.0835	21.70	1.1035	26.96
1.0040	1.03	1.0240	6.20	1.0440	11.39	1.0640	16.60	1.0840	21.83	1.1040	27.09
1.0045	1.16	1.0245	6.33	1.0445	11.52	1.0645	16.73	1.0845	21.96	1.1045	27.22
1.0050	1.29	1.0250	6.46	1.0450	11.65	1.0650	16.86	1.0850	22.09	1.1050	27.35
1.0055	1.42	1.0255	6.59	1.0455	11.78	1.0655	16.99	1.0855	22.22	1.1055	27.49
1.0060	1.55	1.0260	6.72	1.0460	11.91	1.0660	17.12	1.0860	22.36	1.1060	27.62
1.0065	1.68	1.0265	6.85	1.0465	12.04	1.0665	17.25	1.0865	22.49	1.1065	27.75
1.0070	1.81	1.0270	6.98	1.0470	12.17	1.0670	17.38	1.0870	22.62	1.1070	27.88
1.0075	1.94	1.0275	7.11	1.0475	12.30	1.0675	17.51	1.0875	22.75	1.1075	28.01
1.0080	2.07	1.0280	7.24	1.0480	12.43	1.0680	17.64	1.0880	22.88	1.1080	28.15
1.0085	2.19	1.0285	7.37	1.0485	12.56	1.0685	17.77	1.0885	23.01	1.1085	28.28
1.0090	2.32	1.0290	7.50	1.0490	12.69	1.0690	17.90	1.0890	23.14	1.1090	28.41
1.0095	2.45	1.0295	7.63	1.0495	12.82	1.0695	18.03	1.0895	23.28	1.1095	28.54
1.0100	2.58	1.0300	7.76	1.0500	12.95	1.0700	18.16	1.0900	23.41	1.1100	26.67
1.0105	2.71	1.0305	7.89	1.0505	13.08	1.0705	18.30	1.0905	23.54	1.1105	28.81
1.0110	2.84	1.0310	8.02	1.0510	13.21	1.0710	18.43	1.0910	23.67	1.1110	28.94
1.0115	2.97	1.0315	8.14	1.0515	13.34	1.0715	18.56	1.0915	23.80	1.1115	29.07
1.0120	3.10	1.0320	8.27	1.0520	13.47	1.0720	18.69	1.0920	23.93	1.1120	29.20
1.0125	3.23	1.0325	8.40	1.0525	13.60	1.0725	18.82	1.0925	24.07	1.1125	29.33
1.0130	3.36	1.0330	8.53	1.0530	13.73	1.0730	18.95	1.0930	24.20	1.1130	29.47
1.0135	3.49	1.0335	8.66	1.0535	13.86	1.0735	19.08	1.0935	24.33	1.1135	29.60
1.0140	3.62	1.0340	8.79	1.0540	13.99	1.0740	19.21	1.0940	24.46	1.1140	29.73
1.0145	3.75	1.0345	8.92	1.0545	14.12	1.0745	19.34	1.0945	24.59	1.1145	29.86
1.0150	3.87	1.0350	9.05	1.0550	14.25	1.0750	19.47	1.0950	24.72	1.1150	29.99
1.0155	4.00	1.0355	9.18	1.0555	14.38	1.0755	19.60	1.0955	24.85	1.1155	30.13
1.0160	4.13	1.0360	9.31	1.0560	14.51	1.0760	19.73	1.0960	24.99		
1.0165	4.26	1.0365	9.44	1.0565	14.64	1.0765	19.86	1.0965	25.12		
1.0170	4.39	1.0370	9.57	1.0570	14.77	1.0770	20.00	1.0970	25.25		
1.0175	4.52	1.0375	9.70	1.0575	14.90	1.0775	20.12	1.0975	25.38		
1.0180	4.65	1.0380	9.83	1.0580	15.03	1.0780	20.26	1.0980	25.51		
1.0185	4.78	1.0385	9.96	1.0585	15.16	1.0785	20.39	1.0985	25.64		
1.0190	4.91	1.0390	10.09	1.0590	15.29	1.0790	20.52	1.0990	25.78		
1.0195	5.04	1.0395	10.22	1.0595	15.42	1.0795	20.65	1.0995	25.91		

TABLE XII.

TABLE FOR REDUCING SUGAR CONDENSED FROM THAT OF MUNSON AND WALKER.

(Expressed in milligrams.)

Cuprous Oxide (Cu_2O).	Dextrose.	Invert Sugar.	Lactose. $C_{12}H_{22}O_{11} + H_2O$.	Maltose. $C_{12}H_{22}O_{11}$.	Cuprous Oxide (Cu_2O).	Dextrose.	Invert Sugar.	Lactose. $C_{12}H_{22}O_{11} + H_2O$.	Maltose. $C_{12}H_{22}O_{11}$.
10	4.0	4.5	4.0	5.9	260	117.6	121.4	176.3	203.9
15	6.2	6.7	7.5	9.9	265	120.0	123.9	179.7	207.9
20	8.3	8.9	10.9	13.8	270	122.5	126.4	183.2	211.8
25	10.5	11.2	14.4	17.8	275	124.9	128.9	186.6	215.8
30	12.6	13.4	17.8	21.8	280	127.3	131.4	190.1	219.7
35	14.8	15.6	21.3	25.7	285	129.8	133.9	193.5	223.7
40	16.9	17.8	24.7	29.7	290	132.3	136.4	196.9	227.6
45	19.1	20.1	28.2	33.7	295	134.7	138.9	200.4	231.6
50	21.3	22.3	31.6	37.6	300	137.2	141.5	203.8	235.5
55	23.5	24.6	35.0	41.6	305	139.7	144.0	207.2	239.5
60	25.6	26.8	38.4	45.6	310	142.2	146.6	210.7	243.5
65	27.8	29.1	41.9	49.5	315	144.7	149.1	214.1	247.4
70	30.0	31.3	45.4	53.5	320	147.2	151.7	217.6	251.3
75	32.2	33.6	48.8	57.5	325	149.7	154.3	221.0	255.3
80	34.4	35.9	52.3	61.4	330	152.2	156.8	224.4	259.3
85	36.7	38.2	55.7	65.4	335	154.7	159.4	227.9	263.2
90	38.9	40.4	59.2	69.3	340	157.3	162.0	231.3	267.1
95	41.1	42.7	62.6	73.3	345	159.8	164.6	234.7	271.1
100	43.3	45.0	66.1	77.3	350	162.4	167.2	238.2	275.0
105	45.5	47.3	69.5	81.2	355	164.9	169.8	241.6	279.0
110	47.8	49.6	73.0	85.2	360	167.5	172.5	245.1	282.9
115	50.0	51.9	76.4	89.2	365	170.1	175.1	248.5	286.9
120	52.3	54.3	79.8	93.1	370	172.7	177.7	252.0	290.8
125	54.5	56.6	83.3	97.1	375	175.3	180.4	255.4	294.8
130	56.8	58.9	86.7	101.0	380	177.9	183.0	258.8	298.7
135	59.0	61.2	90.2	105.0	385	180.5	185.7	262.3	302.7
140	61.3	63.6	93.6	109.0	390	183.1	188.4	265.7	306.6
145	63.6	65.9	97.1	112.9	395	185.7	191.0	269.1	310.6
150	65.9	68.3	100.5	116.9	400	188.4	193.7	272.6	314.5
155	68.2	70.6	104.0	120.8	405	191.0	196.4	276.0	318.5
160	70.4	73.0	107.4	124.8	410	193.7	199.1	279.5	322.4
165	72.8	75.3	110.9	128.8	415	196.3	201.8	282.9	326.3
170	75.1	77.7	114.3	132.7	420	199.0	204.6	286.3	330.3
175	77.4	80.1	117.7	136.7	425	201.7	207.3	289.8	334.2
180	79.7	82.5	121.2	140.6	430	204.4	210.0	293.2	338.2
185	82.0	84.9	124.6	144.6	435	207.1	212.8	296.6	342.1
190	84.3	87.2	128.1	148.6	440	209.8	215.5	300.1	346.1
195	86.7	89.6	131.5	152.5	445	212.5	218.3	303.5	350.0
200	89.0	92.0	135.0	156.5	450	215.2	221.1	306.9	353.9
205	91.4	94.5	138.4	160.4	455	218.0	223.9	310.4	357.9
210	93.7	96.9	141.9	164.4	460	220.7	226.7	313.8	361.8
215	96.1	99.3	145.3	168.3	465	223.5	229.5	317.3	365.8
220	98.4	101.7	148.7	172.3	470	226.2	232.3	320.7	369.7
225	100.8	104.2	152.2	176.2	475	229.0	235.1	324.1	373.7
230	103.2	106.6	155.6	180.2	480	231.8	237.9	327.6	377.6
235	105.6	109.1	159.1	184.2	485	234.6	240.8	331.0	381.5
240	108.0	111.5	162.5	188.1	490	237.4	243.6	334.4	385.5
245	110.4	114.0	166.0	192.1					
250	112.8	116.4	169.4	196.0					
255	115.2	118.9	172.8	200.0					

TABLE XIII.

EXTRACT IN BEER-WORT.

(According to Schultz and Ostermann.)

Specific Gravity at 15° C.	Extract. Per cent by Weight.	Specific Gravity at 15° C.	Extract. Per cent. by Weight	Specific Gravity at 15° C.	Extract. Per cent. by Weight.	Specific Gravity at 15° C.	Extract. Per cent. by Weight.
1.0000	0.00	1.0235	6.07	1.0470	11.89	1.0705	17.59
1.0005	0.13	1.0240	6.19	1.0475	12.01	1.0710	17.70
1.0010	0.26	1.0245	6.31	1.0480	12.14	1.0715	17.81
1.0015	0.39	1.0250	6.44	1.0485	12.26	1.0720	17.93
1.0020	0.52	1.0255	6.58	1.0490	12.38	1.0725	18.04
1.0025	0.66	1.0260	6.71	1.0495	12.50	1.0730	18.15
1.0030	0.79	1.0265	6.85	1.0500	12.63	1.0735	18.26
1.0035	0.92	1.0270	6.99	1.0505	12.75	1.0740	18.38
1.0040	1.05	1.0275	7.12	1.0510	12.87	1.0745	18.49
1.0045	1.18	1.0280	7.26	1.0515	12.99	1.0750	18.59
1.0050	1.31	1.0285	7.37	1.0520	13.12	1.0755	18.70
1.0055	1.44	1.0290	7.48	1.0525	13.24	1.0760	18.81
1.0060	1.56	1.0395	7.60	1.0530	13.36	1.0765	18.91
1.0065	1.69	1.0300	7.71	1.0535	13.48	1.0770	19.02
1.0070	1.82	1.0305	7.82	1.0540	13.61	1.0775	19.12
1.0075	1.95	1.0310	7.93	1.0545	13.73	1.0780	19.23
1.0080	2.07	1.0315	8.04	1.0550	13.86	1.0785	19.33
1.0085	2.20	1.0320	8.16	1.0555	13.98	1.0790	19.44
1.0090	2.33	1.0325	8.27	1.0560	14.11	1.0795	19.56
1.0095	2.46	1.0330	8.40	1.0565	14.23	1.0800	19.67
1.0100	2.58	1.0335	8.53	1.0570	14.36	1.0805	19.79
1.0105	2.71	1.0340	8.67	1.0575	14.49	1.0810	19.91
1.0110	2.84	1.0345	8.80	1.0580	14.62	1.0815	20.03
1.0115	2.97	1.0350	8.94	1.0585	14.75	1.0820	20.14
1.0120	3.10	1.0355	9.07	1.0590	14.89	1.0825	20.26
1.0125	3.23	1.0360	9.21	1.0595	15.02	1.0830	20.37
1.0130	3.35	1.0365	9.34	1.0600	15.14	1.0835	20.48
1.0135	3.48	1.0370	9.45	1.0605	15.25	1.0840	20.59
1.0140	3.61	1.0375	9.57	1.0610	15.36	1.0845	20.70
1.0145	3.74	1.0380	9.69	1.0615	15.47	1.0850	20.81
1.0150	3.87	1.0385	9.81	1.0620	15.58	1.0855	20.93
1.0155	4.00	1.0390	9.92	1.0625	15.69	1.0860	21.06
1.0160	4.13	1.0395	10.04	1.0630	15.80	1.0865	21.19
1.0165	4.26	1.0400	10.16	1.0635	15.92	1.0870	21.33
1.0170	4.39	1.0405	10.27	1.0640	16.03	1.0875	21.43
1.0175	4.53	1.0410	10.40	1.0645	16.14	1.0880	21.54
1.0180	4.66	1.0415	10.52	1.0650	16.25	1.0885	21.64
1.0185	4.79	1.0420	10.65	1.0655	16.37	1.0890	21.75
1.0190	4.93	1.0425	10.77	1.0660	16.50	1.0895	21.86
1.0195	5.06	1.0430	10.90	1.0665	16.62	1.0900	21.98
1.0200	5.20	1.0435	11.03	1.0670	16.74	1.0905	22.08
1.0205	5.33	1.0440	11.15	1.0675	16.86	1.0910	22.19
1.0210	5.45	1.0445	11.28	1.0680	16.99	1.0915	22.30
1.0215	5.57	1.0450	11.40	1.0685	17.11	1.0920	22.41
1.0220	5.70	1.0455	11.53	1.0690	17.23	1.0925	22.52
1.0225	5.82	1.0460	11.65	1.0695	17.35	1.0930	22.63
1.0230	5.94	1.0465	11.77	1.0700	17.48	1.0935	22.73

TABLE XIII.—*Continued.*

EXTRACT IN BEER-WORT.

(According to Schultz and Ostermann.)

Specific Gravity at 15° C.	Extract. Per cent. by Weight.	Specific Gravity at 15° C.	Extract. Per cent by Weight	Specific Gravity at 15° C.	Extract. Per cent. by Weight	Specific Gravity at 15° C.	Extract. Per cent. by Weight.
1.0940	22.84	1.1020	24.53	1.1100	26.27	1.1180	27.88
1.0945	22.94	1.1025	24.64	1.1105	26.37	1.1185	27.98
1.0950	23.05	1.1030	24.74	1.1110	26.48	1.1190	28.09
1.0955	23.16	1.1035	24.85	1.1115	26.58	1.1195	28.19
1.0960	23.27	1.1040	24.96	1.1120	26.68	1.1200	28.28
1.0965	23.37	1.1045	25.07	1.1125	26.79	1.1205	28.38
1.0970	23.48	1.1050	25.18	1.1130	26.89	1.1210	28.48
1.0975	23.59	1.1055	25.29	1.1135	26.99	1.1215	28.58
1.0980	23.69	1.1060	25.40	1.1140	27.09	1.1220	28.68
1.0985	23.80	1.1065	25.50	1.1145	27.19	1.1225	28.78
1.0990	23.90	1.1070	25.61	1.1150	27.29	1.1230	28.88
1.0995	24.01	1.1075	25.71	1.1155	27.38	1.1235	28.98
1.1000	24.11	1.1080	25.82	1.1160	27.48	1.1240	29.08
1.1005	24.21	1.1085	25.93	1.1165	27.58	1.1245	29.18
1.1010	24.32	1.1090	26.05	1.1170	27.68	1.1250	29.28
1.1015	24.43	1.1095	26.16	1.1175	27.78	1.1255	29.38

LOGARITHMS OF NUMBERS.

Natural Numbers.	0	1	2	3	4	5	6	7	8	9	Proportional Parts.							
											1	2	3	4	5	6	7	8	9
10	0000	0043	0086	0128	0170	0212	0253	0294	0334	0374	4	8	12	17	21	25	29	33	37
11	0414	0453	0492	0531	0569	0607	0645	0682	0719	0755	4	8	11	15	19	23	26	30	34
12	0792	0828	0864	0899	0934	0969	1004	1038	1072	1106	3	7	10	14	1	21	24	28	31
13	1139	1173	1206	1239	1271	1303	1335	1367	1399	1430	3	6	10	13	16	19	23	26	29
14	1461	1492	1523	1553	1584	1614	1644	1673	1703	1732	3	6	9	12	15	18	21	24	27
15	1761	1790	1818	1847	1875	1903	1931	1959	1987	2014	3	6	8	11	14	17	20	22	25
16	2041	2068	2095	2122	2148	2175	2201	2227	2253	2279	3	5	8	11	13	16	18	21	24
17	2304	2330	2355	2380	2405	2430	2455	2480	2504	2529	2	5	7	10	12	15	17	20	22
18	2553	2577	2601	2625	2648	2672	2695	2718	2742	2765	2	5	7	9	12	14	16	19	21
19	2788	2810	2833	2856	2878	2900	2923	2945	2967	2989	2	4	7	9	11	13	16	18	20
20	3010	3032	3054	3075	3096	3118	3139	3160	3181	3201	2	4	6	8	11	13	15	17	19
21	3222	3243	3263	3284	3304	3324	3345	3365	3385	3404	2	4	6	8	10	12	14	16	18
22	3424	3444	3464	3483	3502	3522	3541	3560	3579	3598	2	4	6	8	10	12	14	15	17
23	3617	3636	3655	3674	3692	3711	3729	3747	3766	3784	2	4	6	7	9	11	13	15	17
24	3802	3820	3838	3856	3874	3892	3909	3927	3945	3962	2	4	5	7	9	11	12	14	16
25	3979	3997	4014	4031	4048	4065	4082	4099	4116	4133	2	3	5	7	9	10	12	14	15
26	4150	4166	4183	4200	4216	4232	4249	4265	4281	4298	2	3	5	7	8	10	11	13	15
27	4314	4330	4346	4362	4378	4393	4409	4425	4440	4456	2	3	5	6	8	9	11	13	14
28	4472	4487	4502	4518	4533	4548	4564	4579	4594	4609	2	3	5	6	8	9	11	12	14
29	4624	4639	4654	4669	4683	4698	4713	4728	4742	4757	1	3	4	6	7	9	10	12	13
30	4771	4786	4800	4814	4829	4843	4857	4871	4886	4900	1	3	4	6	7	9	10	11	13
31	4914	4928	4942	4955	4969	4983	4997	5011	5024	5038	1	3	4	6	7	8	10	11	12
32	5051	5065	5079	5092	5105	5119	5132	5145	5159	5172	1	3	4	5	7	8	9	11	12
33	5185	5198	5211	5224	5237	5250	5263	5276	5289	5302	1	3	4	5	6	8	9	10	12
34	5315	5328	5340	5353	5366	5378	5391	5403	5416	5428	1	3	4	5	6	8	9	10	11
35	5441	5453	5465	5478	5490	5502	5514	5527	5539	5551	1	2	4	5	6	7	9	10	11
36	5563	5575	5587	5599	5611	5623	5635	5647	5658	5670	1	2	4	5	6	7	8	10	11
37	5682	5694	5705	5717	5729	5740	5752	5763	5775	5786	1	2	3	5	6	7	8	9	10
38	5798	5809	5821	5832	5843	5855	5866	5877	5888	5899	1	2	3	5	6	7	8	9	10
39	5911	5922	5933	5944	5955	5966	5977	5988	5999	6010	1	2	3	4	5	7	8	9	10
40	6021	6031	6042	6053	6064	6075	6085	6096	6107	6117	1	2	3	4	5	6	8	9	10
41	6128	6138	6149	6160	6170	6180	6191	6201	6212	6222	1	2	3	4	5	6	7	8	9
42	6232	6243	6253	6263	6274	6284	6294	6304	6314	6325	1	2	3	4	5	6	7	8	9
43	6335	6345	6355	6365	6375	6385	6395	6405	6415	6425	1	2	3	4	5	6	7	8	9
44	6435	6444	6454	6464	6474	6484	6493	6503	6513	6522	1	2	3	4	5	6	7	8	9
45	6532	6542	6551	6561	6571	6580	6590	6599	6609	6618	1	2	3	4	5	6	7	8	9
46	6628	6637	6646	6656	6665	6675	6684	6693	6702	6712	1	2	3	4	5	6	7	7	8
47	6721	6730	6739	6749	6758	6767	6776	6785	6794	6803	1	2	3	4	5	5	6	7	8
48	6812	6821	6830	6839	6848	6857	6866	6875	6884	6893	1	2	3	4	4	5	6	7	8
49	6902	6911	6920	6928	6937	6946	6955	6964	6972	6981	1	2	3	4	4	5	6	7	8
50	6990	6998	7007	7016	7024	7033	7042	7050	7059	7067	1	2	3	3	4	5	6	7	8
51	7076	7084	7093	7101	7110	7118	7126	7135	7143	7152	1	2	3	3	4	5	6	7	8
52	7160	7168	7177	7185	7193	7202	7210	7218	7226	7235	1	2	2	3	4	5	6	7	7
53	7243	7251	7259	7267	7275	7284	7292	7300	7308	7316	1	2	2	3	4	5	6	6	7
54	7324	7332	7340	7348	7356	7364	7372	7380	7388	7396	1	2	2	3	4	5	6	6	7

LOGARITHMS OF NUMBERS.

Natural Numbers.	0	1	2	3	4	5	6	7	8	9	Proportional Parts.								
											1	2	3	4	5	6	7	8	9
55	7404	7412	7419	7427	7435	7443	7451	7459	7466	7474	1	2	2	3	4	5	5	6	7
56	7482	7490	7497	7505	7513	7520	7528	7536	7543	7551	1	2	2	3	4	5	5	6	7
57	7559	7566	7574	7582	7589	7597	7604	7612	7619	7627	1	2		3	4	5		6	7
58	7634	7642	7649	7657	7664	7672	7679	7686	7694	7701	1	1	2	3	4	4	5		7
59	7709	7716	7723	7731	7738	7745	7752	7760	7767	7774	1	1	2	3	4	4	5	6	7
60	7782	7789	7796	7803	7810	7818	7825	7832	7839	7846		1	2	3	4	4	5	6	6
61	7853	7860	7868	7875	7882	7889	7896	7903	7910	7917	1	1	2	3	4	4	5	6	6
62	7924	7931	7938	7945	7952	7959	7966	7973	7980	7987	1	1	2	3	3	4	5	6	6
63	7993	8000	8007	8014	8021	8028	8035	8041	8048	8055	1	1	2	3	3	4	5	5	6
64	8062	8069	8075	8082	8089	8096	8102	8109	8116	8122	1	1	2	3	3	4	5	5	6
65	8129	8136	8142	8149	8156	8162	8169	8176	8182	8189	1	1	2	3	3	4	5	5	6
66	8195	8202	8209	8215	8222	8228	8235	8241	8248	8254	1	1	2	3	3	4	5	5	6
67	8261	8267	8274	8280	8287	8293	8299	8306	8312	8319	1	1	2	3	3	4	5	5	6
68	8325	8331	8338	8344	8351	8357	8363	8370	8376	8382	1	1	2	3	3	4	4	5	6
69	8388	8395	8401	8407	8414	8420	8426	8432	8439	8445	1	1	2	2	3	4	4	5	6
70	8451	8457	8463	8470	8476	8482	8488	8494	8500	8506	1	1	2	2	3	4	4	5	6
71	8513	8519	8525	8531	8537	8543	8549	8555	8561	8567	1	1	2	2	3	4	4	5	5
72	8573	8579	8585	8591	8597	8603	8609	8615	8621	8627	1	1	2	2	3	4	4	5	5
73	8633	8639	8645	8651	8657	8663	8669	8675	8681	8686	1	1	2	2	3	4	4	5	5
74	8692	8698	8704	8710	8716	8722	8727	8733	8739	8745	1	1	2	2	3	4	4	5	5
75	8751	8756	8762	8768	8774	8779	8785	8791	8797	8802	1	1	2	2	3	3	4	5	5
76	8808	8814	8820	8825	8831	8837	8842	8848	8854	8859	1	1	2	2	3	3	4	5	5
77	8865	8871	8876	8882	8887	8893	8899	8904	8910	8915	1	1	2	2	3	3	4	4	5
78	8921	8927	8932	8938	8943	8949	8954	8960	8965	8971	1	1	2	2	3	3	4	4	5
79	8976	8982	8987	8993	8998	9004	9009	9015	9020	9026	1	1	2	2	3	3	4	4	5
80	9031	9036	9042	9047	9053	9058	9063	9069	9074	9079	1	1	2	2	3	3	4	4	5
81	9085	9090	9096	9101	9106	9112	9117	9122	9128	9133	1	1	2	2	3	3	4	4	5
82	9138	9143	9149	9154	9159	9165	9170	9175	9180	9186	1	1	2	2	3	3	4	4	5
83	9191	9196	9201	9206	9212	9217	9222	9227	9232	9238	1	1	2	2	3	3	4	4	5
84	9243	9248	9253	9258	9263	9269	9274	9279	9284	9289	1	1	2	2	3	3	4	4	5
85	9294	9299	9304	9309	9315	9320	9325	9330	9335	9340	1	1	2	2	3	3	4	4	5
86	9345	9350	9355	9360	9365	9370	9375	9380	9385	9390	1	1	2	2	3	3	4	4	5
87	9395	9400	9405	9410	9415	9420	9425	9430	9435	9440	0	1	1	2	2	3	3	4	4
88	9445	9450	9455	9460	9465	9469	9474	9479	9484	9489	0	1	1	2	2	3	3	4	4
89	9494	9499	9504	9509	9513	9518	9523	9528	9533	9538	0	1	1	2	2	3	3	4	4
90	9542	9547	9552	9557	9562	9566	9571	9576	9581	9586	0	1	1	2	2	3	3	4	4
91	9590	9595	9600	9605	9609	9614	9619	9624	9628	9633	0	1	1	2	2	3	3	4	4
92	9638	9643	9647	9652	9657	9661	9666	9671	9675	9680	0	1	1	2	2	3	3	4	4
93	9685	9689	9694	9699	9703	9708	9713	9717	9722	9727	0	1	1	2	2	3	3	4	4
94	9731	9736	9741	9745	9750	9754	9759	9763	9768	9773	0	1	1	2	2	3	3	4	4
95	9777	9782	9786	9791	9795	9800	9805	9809	9814	9818	0	1	1	2	2	3	3	4	4
96	9823	9827	9832	9836	9841	9845	9850	9854	9859	9863	0	1	1	2	2	3	3	4	4
97	9868	9872	9877	9881	9886	9890	9894	9899	9903	9908	0	1	1	2	2	3	3	4	4
98	9912	9917	9921	9926	9930	9934	9939	9943	9948	9952	0	1	1	2	2	3	3	4	4
99	9956	9961	9965	9969	9974	9978	9983	9987	9991	9996	0	1	1	2	2	3	3	3	4

ANTILOGARITHMS.

Logarithms.	0	1	2	3	4	5	6	7	8	9	Proportional Parts.								
											1	2	3	4	5	6	7	8	9
.00	1000	1002	1005	1007	1009	1012	1014	1016	1019	1021	0	0	1	1	1	1	2	2	2
.01	1023	1026	1028	1030	1033	1035	1038	1040	1042	1045	0	0	1	1	1	1	2	2	2
.02	1047	1050	1052	1054	1057	1059	1062	1064	1067	1069	0	0	1	1	1	1	2	2	2
.03	1072	1074	1076	1079	1081	1084	1086	1089	1091	1094	0	0	1	1	1	1	2	2	2
.04	1096	1099	1102	1104	1107	1109	1112	1114	1117	1119	0	1	1	1	1	2	2	2	2
.05	1122	1125	1127	1130	1132	1135	1138	1140	1143	1146	0	1	1	1	1	2	2	2	2
.06	1148	1151	1153	1156	1159	1161	1164	1167	1169	1172	0	1	1	1	1	2	2	2	2
.07	1175	1178	1180	1183	1186	1189	1191	1194	1197	1199	0	1	1	1	1	2	2	2	2
.08	1202	1205	1208	1211	1213	1216	1219	1222	1225	1227	0	1	1	1	1	2	2	2	3
.09	1230	1233	1236	1239	1242	1245	1247	1250	1253	1256	0	1	1	1	1	2	2	2	3
.10	1259	1262	1265	1268	1271	1274	1276	1279	1282	1285	0	1	1	1	1	2	2	2	3
.11	1288	1291	1294	1297	1300	1303	1306	1309	1312	1315	0	1	1	1	2	2	2	2	3
.12	1318	1321	1324	1327	1330	1334	1337	1340	1343	1346	0	1	1	1	2	2	2	2	3
.13	1349	1352	1355	1358	1361	1365	1368	1371	1374	1377	0	1	1	1	2	2	2	3	3
.14	1380	1384	1387	1390	1393	1396	1400	1403	1406	1409	0	1	1	1	2	2	2	3	3
.15	1413	1416	1419	1422	1426	1429	1432	1435	1439	1442	0	1	1	1	2	2	2	3	3
.16	1445	1449	1452	1455	1459	1462	1466	1469	1472	1476	0	1	1	1	2	2	2	3	3
.17	1479	1483	1486	1489	1493	1496	1500	1503	1507	1510	0	1	1	1	2	2	2	3	3
.18	1514	1517	1521	1524	1528	1531	1535	1538	1542	1545	0	1	1	1	2	2	2	3	3
.19	1549	1552	1556	1560	1563	1567	1570	1574	1578	1581	0	1	1	1	2	2	3	3	3
.20	1585	1589	1592	1596	1600	1603	1607	1611	1614	1618	0	1	1	1	2	2	3	3	3
.21	1622	1626	1629	1633	1637	1641	1644	1648	1652	1656	0	1	1	2	2	2	3	3	3
.22	1660	1663	1667	1671	1675	1679	1683	1687	1690	1694	0	1	1	2	2	2	3	3	3
.23	1698	1702	1706	1710	1714	1718	1722	1726	1730	1734	0	1	1	2	2	2	3	3	4
.24	1738	1742	1746	1750	1754	1758	1762	1766	1770	1774	0	1	1	2	2	2	3	3	4
.25	1778	1782	1786	1791	1795	1799	1803	1807	1811	1816	0	1	1	2	2	2	3	3	4
.26	1820	1824	1828	1832	1837	1841	1845	1849	1854	1858	0	1	1	2	2	3	3	3	4
.27	1862	1866	1871	1875	1879	1884	1888	1892	1897	1901	0	1	1	2	2	3	3	3	4
.28	1905	1910	1914	1919	1923	1928	1932	1936	1941	1945	0	1	1	2	2	3	3	4	4
.29	1950	1954	1959	1963	1968	1972	1977	1982	1986	1991	0	1	1	2	2	3	3	4	4
.30	1995	2000	2004	2009	2014	2018	2023	2028	2032	2037	0	1	1	2	2	3	3	4	4
.31	2042	2046	2051	2056	2061	2065	2070	2075	2080	2084	0	1	1	2	2	3	3	4	4
.32	2089	2094	2099	2104	2109	2113	2118	2123	2128	2133	0	1	1	2	2	3	3	4	4
.33	2138	2143	2148	2153	2158	2163	2168	2173	2178	2183	0	1	1	2	2	3	3	4	4
.34	2188	2193	2198	2203	2208	2213	2218	2223	2228	2234	1	1	2	2	3	3	4	4	5
.35	2239	2244	2249	2254	2259	2265	2270	2275	2280	2286	1	1	2	2	3	3	4	4	5
.36	2291	2296	2301	2307	2312	2317	2323	2328	2333	2339	1	1	2	2	3	3	4	4	5
.37	2344	2350	2355	2360	2366	2371	2377	2382	2388	2393	1	1	2	2	3	3	4	4	5
.38	2399	2404	2410	2415	2421	2427	2432	2438	2443	2449	1	1	2	2	3	3	4	4	5
.39	2455	2460	2466	2472	2477	2483	2489	2495	2500	2506	1	1	2	2	3	3	4	5	5
.40	2512	2518	2523	2529	2535	2541	2547	2553	2559	2564	1	1	2	2	3	4	4	5	5
.41	2570	2576	2582	2588	2594	2600	2606	2612	2618	2624	1	1	2	2	3	4	4	5	5
.42	2630	2636	2642	2649	2655	2661	2667	2673	2679	2685	1	1	2	2	3	4	4	5	6
.43	2692	2698	2704	2710	2716	2723	2729	2735	2742	2748	1	1	2	3	3	4	4	5	6
.44	2754	2761	2767	2773	2780	2786	2793	2799	2805	2812	1	1	2	3	3	4	4	5	6
.45	2818	2825	2831	2838	2844	2851	2858	2864	2871	2877	1	1	2	3	3	4	5	5	6
.46	2884	2891	2897	2904	2911	2917	2924	2931	2938	2944	1	1	2	3	3	4	5	5	6
.47	2951	2958	2965	2972	2979	2985	2992	2999	3006	3013	1	1	2	3	3	4	5	5	6
.48	3020	3027	3034	3041	3048	3055	3062	3069	3076	3083	1	1	2	3	4	4	5	6	6
.49	3090	3097	3105	3112	3119	3126	3133	3141	3148	3155	1	1	2	3	4	4	5	6	6

ANTILOGARITHMS.

Logarithms.	0	1	2	3	4	5	6	7	8	9	Proportional Parts.								
											1	2	3	4	5	6	7	8	9
.50	3162	3170	3177	3184	3192	3199	3206	3214	3221	3228	1	1	2	3	4	4	5	6	7
.51	3236	3243	3251	3258	3266	3273	3281	3289	3296	3304	1	2	2	3	4	5	5	6	7
.52	3311	3319	3327	3334	3342	3350	3357	3365	3373	3381	1	2	2	3	4	5	5	6	7
.53	3388	3396	3404	3412	3420	3428	3436	3443	3451	3459	1	2	2	3	4	5	6	6	7
.54	3467	3475	3483	3491	3499	3508	3516	3524	3532	3540	1	2	2	3	4	5	6	6	7
.55	3548	3556	3565	3573	3581	3589	3597	3606	3614	3622	1	2	2	3	4	5	6	7	7
.56	3631	3639	3648	3656	3664	3673	3681	3690	3698	3707	1	2	3	3	4	5	6	7	8
.57	3715	3724	3733	3741	3750	3758	3767	3776	3784	3793	1	2	3	3	4	5	6	7	8
.58	3802	3811	3819	3828	3837	3846	3855	3864	3873	3882	1	2	3	4	4	5	6	7	8
.59	3890	3899	3908	3917	3926	3936	3945	3954	3963	3972	1	2	3	4	5	5	6	7	8
.60	3981	3990	3999	4009	4018	4027	4036	4046	4055	4064	1	2	3	4	5	6	6	7	8
.61	4074	4083	4093	4102	4111	4121	4130	4140	4150	4159	1	2	3	4	5	6	7	8	9
.62	4169	4178	4188	4198	4207	4217	4227	4236	4246	4256	1	2	3	4	5	6	7	8	9
.63	4266	4276	4285	4295	4305	4315	4325	4335	4345	4355	1	2	3	4	5	6	7	8	9
.64	4365	4375	4385	4395	4406	4416	4426	4436	4446	4457	1	2	3	4	5	6	7	8	9
.65	4467	4477	4487	4498	4508	4519	4529	4539	4550	4560	1	2	3	4	5	6	7	8	9
.66	4571	4581	4592	4603	4613	4624	4634	4645	4656	4667	1	2	3	4	5	6	7	9	10
.67	4677	4688	4699	4710	4721	4732	4742	4753	4764	4775	1	2	3	4	5	7	8	9	10
.68	4786	4797	4808	4819	4831	4842	4853	4864	4875	4887	1	2	3	4	6	7	8	9	10
.69	4898	4909	4920	4932	4943	4955	4966	4977	4989	5000	1	2	3	5	6	7	8	9	10
.70	5012	5023	5035	5047	5058	5070	5082	5093	5105	5117	1	2	4	5	6	7	8	9	11
.71	5129	5140	5152	5164	5176	5188	5200	5212	5224	5236	1	2	4	5	6	7	8	10	11
.72	5248	5260	5272	5284	5297	5309	5321	5333	5346	5358	1	2	4	5	6	7	9	10	11
.73	5370	5383	5395	5408	5420	5433	5445	5458	5470	5483	1	3	4	5	6	8	9	10	11
.74	5495	5508	5521	5534	5546	5559	5572	5585	5598	5610	1	3	4	5	6	8	9	10	12
.75	5623	5636	5649	5662	5675	5689	5702	5715	5728	5741	1	3	4	5	7	8	9	10	12
.76	5754	5768	5781	5794	5808	5821	5834	5848	5861	5875	1	3	4	5	7	8	9	11	12
.77	5888	5902	5916	5929	5943	5957	5970	5984	5998	6012	1	3	4	5	7	8	10	11	12
.78	6026	6039	6053	6067	6081	6095	6109	6124	6138	6152	1	3	4	6	7	8	10	11	13
.79	6166	6180	6194	6209	6223	6237	6252	6266	6281	6295	1	3	4	6	7	9	10	11	13
.80	6310	6324	6339	6353	6368	6383	6397	6412	6427	6442	1	3	4	6	7	9	10	12	13
.81	6457	6471	6486	6501	6516	6531	6546	6561	6577	6592	2	3	5	6	8	9	11	12	14
.82	6607	6622	6637	6653	6668	6683	6699	6714	6730	6745	2	3	5	6	8	9	11	12	14
.83	6761	6776	6792	6808	6823	6839	6855	6871	6887	6902	2	3	5	6	8	9	11	13	14
.84	6918	6934	6950	6966	6982	6998	7015	7031	7047	7063	2	3	5	6	8	10	11	13	15
.85	7079	7096	7112	7129	7145	7161	7178	7194	7211	7228	2	3	5	7	8	10	12	13	15
.86	7244	7261	7278	7295	7311	7328	7345	7362	7379	7396	2	3	5	7	8	10	12	13	15
.87	7413	7430	7447	7464	7482	7499	7516	7534	7551	7568	2	3	5	7	9	10	12	14	16
.88	7586	7603	7621	7638	7656	7674	7691	7709	7727	7745	2	4	5	7	9	11	12	14	16
.89	7762	7780	7798	7816	7834	7852	7870	7889	7907	7925	2	4	5	7	9	11	13	14	16
.90	7943	7962	7980	7998	8017	8035	8054	8072	8091	8110	2	4	6	7	9	11	13	15	17
.91	8128	8147	8166	8185	8204	8222	8241	8260	8279	8299	2	4	6	8	9	11	13	15	17
.92	8318	8337	8356	8375	8395	8414	8433	8453	8472	8492	2	4	6	8	10	12	14	15	17
.93	8511	8531	8551	8570	8590	8610	8630	8650	8670	8690	2	4	6	8	10	12	14	16	18
.94	8710	8730	8750	8770	8790	8810	8831	8851	8872	8892	2	4	6	8	10	12	14	16	18
.95	8913	8933	8954	8974	8995	9016	9036	9057	9078	9099	2	4	6	8	10	12	15	17	19
.96	9120	9141	9162	9183	9204	9226	9247	9268	9290	9311	2	4	6	8	11	13	15	17	19
.97	9333	9354	9376	9397	9419	9441	9462	9484	9506	9528	2	4	7	9	11	13	15	17	20
.98	9550	9572	9594	9616	9638	9661	9683	9705	9727	9750	2	4	7	9	11	13	16	18	20
.99	9772	9795	9817	9840	9863	9886	9908	9931	9954	9977	2	5	7	9	11	14	16	18	20

APPENDIX B.

REAGENTS.

AIR ANALYSIS.

Barium Hydroxide.—A solution containing about 4 grams of BaO and 0.2 gram of $BaCl_2$ to the liter. (1 c.c. = 1 mg. CO_2, approximately.)

Sulphuric Acid.—Dilute 45.45 c.c. of normal sulphuric acid to one liter. (1 c.c. = 1 mg. CO_2.) To standardize the solution measure 25 c.c. into a weighed platinum dish, add dilute ammonia-water in slight excess, evaporate to dryness on the water-bath, and dry at 120° C. to constant weight.

Standard Lime-water.—(For Popular Tests.)—Shake one part of freshly slaked lime with 20 parts of distilled water for twenty minutes and let the solution stand overnight or until perfectly clear. This solution should be very nearly equivalent to the above standard sulphuric acid. To a liter of distilled water add 5 c.c. of a solution of 0.7 gram of phenolphthalein in 100 c.c. of 50 per cent. alcohol and add lime-water drop by drop until a slight permanent pink color is produced. Add 12.6 c.c. of the above calcium hydroxide solution. The resulting solution is the standard lime-water used for the tests.

WATER ANALYSIS.

For Ammonia.—*Water Free from Ammonia.*—The ammonia-free water used in this laboratory is made by redistilling distilled water from a solution of alkaline permangan-

ate in a steam-heated copper still. The apparatus used is shown in Fig. 15. Only the middle portion of the distillate is collected. Oftentimes the distillate from a good spring-water may be used.

Nessler's Reagent.—Dissolve 61.750 grams KI in 250 c.c. distilled water and add a cold solution of $HgCl_2$ which has been saturated by boiling an excess of the salt and allowing it to crystallize out. Add the $HgCl_2$ cautiously until a slight permanent red precipitate (HgI_2) appears. Dissolve this

FIG. 15.—Still for Ammonia-free Water.

slight precipitate by adding 0.750 gram powdered KI. Then add 150 grams of KOH dissolved in 250 c.c. of water. Make up to the liter and allow it to stand overnight to settle. This solution should give the required color with ammonia within five minutes, and should not precipitate within two hours.

Alkaline Permanganate.—Dissolve 233 grams of the best stick potash in 350 c.c. of distilled water. Filter this strong

solution, if necessary, through a layer of glass wool on a porcelain filter-plate. Dilute with 700 to 750 c.c. of distilled water to a sp. gr. of 1.125, add 8 grams of potassium permanganate crystals, and boil down to one liter to free the solution from nitrogen. Each new lot of reagent must be tested before being used, but when the chemicals used are all good there should be no correction needed for ammonia in the solution.

Standard Ammonia Solution.—Dissolve 3.8215 grams chemically pure NH_4Cl in a liter of water free from ammonia. This is the strong solution from which the standard solution is made by diluting 10 c.c. to a liter with water free from ammonia. One c.c. of the standard solution = 0.00001 gram nitrogen. This solution, like the nitrite standard and other dilute solutions, must be preserved in sterilized bottles protected from dust and organic matter.

For Nitrites.—*Standard Nitrite Solution.*—The pure silver nitrite used in making this solution is prepared by the double decomposition of silver nitrate and potassium nitrite, and repeated crystallizations from water of the rather difficultly soluble silver nitrite. 1.1 grams of this silver nitrite are dissolved in nitrite-free water, the silver completely precipitated by the addition of the standard salt solution used in the determination of chlorine, and the solution made up to 1 liter. 100 c.c. of this strong solution are diluted to 1 liter, and 10 c.c. of this last solution again diluted to 1 liter. The final solution is the one used in preparing standards. 1 c.c. = 0.0000001 gram nitrogen.

Sulphanilic Acid.—Dissolve 3.3 grams sulphanilic acid in 750 c.c. of water by the aid of heat, and add 250 c.c. glacial acetic acid.

Naphtylamine Acetate.—Boil 0.5 gram of α-naphtylamine in 100 c.c. of water in a small Erlenmeyer flask for about five

minutes, filter through a plug of washed absorbent cotton, add 250 c.c. glacial acetic acid, and dilute to a liter.

For Nitrates.—*Standard Nitrate Solution.*—Dissolve 0.720 gram of pure recrystallized KNO_3 in 1 liter of water. Evaporate 10 c.c. of this strong solution cautiously on the water-bath, moisten quickly and thoroughly with 2 c.c. of phenol-disulphonic acid, and dilute to 1 liter for the standard solution. 1 c.c. = 0.000001 gram nitrogen.

Phenol-disulphonic Acid.—Heat together 3 grams synthetic phenol with 37 grams pure, concentrated H_2SO_4 in a boiling-water bath for six hours.

For Kjeldahl Process.—*Sulphuric Acid.*—Sp. gr. 1.84. This should be free from nitrogen. May be obtained from Baker and Adamson, Easton, Pa.

Potassium Hydroxide.—Dissolve 350 grams of the best stick potash in .25 liters of water and boil down to something less thai a liter with 3 grams of permanganate crystals. When cold, dilute to a liter with water free from ammonia.

For Phosphates.—*Ammonium Molybdate.*—Dissolve 50 grams of the pure neutral salt in a liter of distilled water.

Nitric Acid (sp. gr. 1.07).—One part of acid (sp. gr. 1.42) to five parts of water.

Standard Phosphate Solution.—Dissolve 0 5324 gram of pure crystallized sodium phosphate ($Na_2HPO_4.12H_2O$) in freshly distilled water, add 100 c.c. of nitric acid (1.07), and dilute to 1 liter. 1 c.c. = 0.0001 gram P_2O_5. The solution keeps without change for several months if preserved in well-stoppered bottles of hard glass; after a longer time it becomes slightly stronger, owing to the silica dissolved from the glass.

For Chlorine.—*Salt Solution.*—Dissolve 16.48 grams of fused NaCl in a liter of distilled water. For the standard

solution dilute 100 c.c. of this strong solution to 1 liter. 1 c.c. = 0.001 gram chlorine.

Silver Nitrate.—Dissolve about 2.42 grams of $AgNO_3$ (dry crystals) in 1 liter of chlorine-free water. 1 c.c. = .0005 gram Cl, approximately. Standardize against the NaCl solution.

Potassium Chromate.—Dissolve 50 grams neutral K_2CrO_4 in a little distilled water. Add enough $AgNO_3$ to produce a slight red precipitate. Filter and make the filtrate up to a liter with water free from chlorine.

Milk of Alumina for Decolorization.—Dissolve 125 grams of potash or ammonia alum in a liter of distilled water. Precipitate the $Al(OH)_3$ by the cautious addition of NH_4OH. Wash the precipitate in a large jar by decantation until free from chlorine, nitrites, and ammonia.

For Hardness.—*Standard Calcium Chloride Solution.*—Dissolve 0.200 gram of pure Iceland spar in dilute HCl, taking care to avoid loss by spattering, and evaporate to dryness several times, to remove the excess of acid. Dissolve the calcium chloride thus formed in 1 liter of water.

Standard Soap Solution.—Dissolve 100 grams of the best white, dry castile soap in a liter of 80 per cent. alcohol. Of this strong solution dissolve 75–100 c.c. in a liter of 70 per cent. alcohol. This solution must have 70 per cent. alcohol added to it until 14.25 c.c. of it give the required lather with 50 c.c. of the above $CaCl_2$ solution.

Erythrosine Indicator.—Dissolve 0.1 gram of erythrosine in 1 liter of water.

For Iron.—*Standard Iron Solution.*—Dissolve 0.86 gram of ferric ammonium alum, $(NH_4)_2SO_4.Fe_2(SO_4)_3.24H_2O$, or a corresponding amount of the potassium salt in 500 c.c. of water, add 5 c.c. HNO_3 (1.20), and dilute to 1 liter. 1 c.c. = 0.0001 gram Fe.

Potassium Sulphocyanide.—5 grams per liter.

Hydrochloric Acid.—1 part HCl (sp. gr. 1.20) to 1 part of water.

Potassium Permanganate.—5 grams $KMnO_4$ in 1 liter of water.

For Dissolved Oxygen.—(*a*) 48 grams of $MnSO_4.4H_2O$ in 100 c.c. of water; (*b*) 360 grams of NaOH and 100 grams of KI in 1 liter of water; (*c*) HCl, sp. gr. 1.20

Sodium Thiosulphate Solution.—Dissolve 25 grams of pure recrystallized sodium thiosulphate in 1 liter of water. Dilute 200 c.c. to 1 liter and standardize against a known $K_2Cr_2O_7$ solution.

For Lead.—*Standard Lead Solution.*—To a strong solution of lead acetate add a slight excess of H_2SO_4, filter off and wash the precipitate. Dissolve it in ammonium acetate solution, made by neutralizing glacial acetic acid with strong ammonia. Make up to a known volume and determine the lead in an aliquot part by precipitating with $K_2Cr_2O_7$ and weighing the lead chromate. Dilute an aliquot part to make a convenient standard, say about 1 c.c. = 0.001 gram of Pb.

FOOD ANALYSIS.

Acid Mercuric Nitrate.—Dissolve mercury in double its weight of nitric acid (sp. gr. 1.42) and dilute the solution with five times its volume of water.

Pumice.—Bits of ignited pumice, about the size of a pea, dropped while hot into water and bottled for use.

Alcohol (for Reichert-Meissl method).—95 per cent. alcohol redistilled from potassium hydroxide.

Potassium Hydroxide (for Reichert-Meissl method).—One part good quality caustic potash dissolved in one part of water.

Iodine Solution (for Hanus' method).—This is conveniently made up according to the directions of Hunt.* Dis-

* *J. Soc. Chem. Ind.*, 21 (1902), 454.

solve 13.2 grams iodine in 1 liter of glacial acetic acid (99 per cent., showing no reduction with bichromate and sulphuric acid). This will best be done by adding the acetic acid in portions and heating on the water-bath with frequent shaking. To the cold solution add enough bromine to double the halogen content, as shown by titration. Three c.c. of bromine is sufficient. A slight excess of iodine is not detrimental.

Potassium Iodide.—Dissolve 200 grams of potassium iodide in 1 liter of water.

Anhydrous Ether.—Wash ordinary ether several times with distilled water and add solid caustic potash until most of the water has been removed. Then add small pieces of clean metallic sodium until there is no further evolution of hydrogen gas. The ether thus prepared should be kept over metallic sodium and a tube of calcium chloride should be inserted in the stopper, in order to allow of the escape of any accumulated gas.

Potassium Sulphide.—Dissolve 40 grams of the crystallized salt in 1 liter of water and filter through glass wool.

Potassium Hydroxide (for Kjeldahl process).—Dissolve 700 grams of the best quality of stick potash in water and dilute to 1 liter.

Basic Lead Acetate.—Boil for half an hour 440 grams of lead acetate and 264 grams of litharge in 1500 c.c. of water. Cool and dilute to 2 liters. Allow to settle and siphon off the clear liquid. (Sp. gr. about 1.27, containing about 35 per cent. of the basic salt.)

Ferric Alum.—Dissolve 2 grams of ferric alum in 100 c.c. of water, boil the solution until a precipitate appears, and filter.

Fehling's Solution.—(*a*) Dissolve 69.28 grams of C.P. crystallized copper sulphate, carefully dried between blotting-paper, in water and make up to 1 liter, including 1 c.c. of strong sulphuric acid; (*b*) Dissolve 346 grams of sodium potassium tartrate and 100 grams of sodium hydroxide in water and make up to a liter.

BIBLIOGRAPHY.

THE following list comprises some of the more important works bearing on the subjects treated in the preceding pages. A bibliography of the chemistry of foods complete to 1882 may be found in the Second Annual Report of the New York State Board of Health, and more or less complete bibliographies are to be found in Sadtler's "Industrial Organic Chemistry," Blyth's "Composition and Analysis of Foods," and Leach's "Food Inspection and Analysis."

AIR.

Air and Rain. R. Angus Smith. Longmans, Green & Co. London. 1872.

Air and its Relations to Life. Walter N. Hartley. D. Appleton & Co. New York. 1875.

Report on the Air of Glasgow. E. M. Dixon. Robert Anderson. Glasgow. 1877.

Recherches sur l'Air Confiné. A. Braud. Baillière et Fils. Paris. 1880.

Air Analysis. J. A. Wanklyn and W. J. Cooper. Kegan Paul, Trench, Trübner & Co. London. 1890.

Les Poisons de l'Air. N. Grehaut. Baillière et Fils. Paris. 1890.

Treatise on Hygiene and Public Health. Vol. I. Thomas Stevenson and S. F. Murphy. Blakiston, Son & Co. Phila. 1892.

Air and Water. Vivian B. Lewes. Methuen & Co. London. 1892.

Methods for the Determination of Organic Matter in Air. D. H. Bergey. Smithsonian Institution. Washington, D. C. 1896.

The Detection and Measurement of Inflammable Gas and Vapor in the Air. Frank Clowes. Crosby, Lockwood & Son. London. 1896.

Sanitation in Daily Life. Ellen H. Richards. Whitcomb & Barrows.

Air Currents and the Laws of Ventilation. W. W. Shaw. Cambridge, at the University Press.

VENTILATION.

Heating and Ventilation of the New Building, Mass. Inst. Tech. S. H. Woodbridge. Tech. Quart., 2, 76. 1888.

Heating and Ventilation. J. S. Billings. Sanitary Engineer. New York. 1893.

Heating and Ventilating Buildings. Rolla C. Carpenter. John Wiley & Sons. New York. 1895.

WATER.

Report of the Royal Commission on Water Supply. Great Britain Parliamentary Documents. London. 1869–'70.

Sixth Report of Rivers Pollution Commission, Great Britain. London. 1876.

Water Softening and Scientific Filtration. Walter George Atkins. E. & F. N. Spon. London. 1880.

National Board of Health Report for 1882.

Water Supply (Considered mainly from a Chemical and Sanitary Standpoint). W. R. Nichols. John Wiley & Sons. New York. 1883.

Water Analysis for Sanitary Purposes. E. Frankland. John Van Voorst. London. 1890.

The Organic Analysis of Potable Waters. J. A. Blair. 1890.

Drinking Water and Ice Supplies. T. Mitchell Prudden. G. P. Putnam & Sons. New York. 1891.

Potable Water. Floyd Davis. Silver, Burdett & Co. New York. 1891.

The Action of Water on Lead. John Henry Garrett. H. K. Lewis. London. 1891.

Treatise on Hygiene and Public Health. Vol. I. Thomas Stevenson and S. F. Murphy. Blakiston, Son & Co. Phila. 1892.

Sewage Disposal in the United States. Geo. W. Rafter and M. N. Baker. D. Van Nostrand Co. New York. 1894.

Les Eaux-d'Alimentation, Épuration, Filtration, Sterilization. Edm. Guinochet. Baillière et Fils. Paris. 1894.

Micro-Organisms in Water. Percy F. Frankland and Mrs. Percy F. Frankland. London. 1894.

The Filtration of Public Water Supplies. Allen Hazen. John Wiley & Sons. New York. 1895.

Examination of Water for Sanitary and Technical Purposes. Henry Leffman. Blakiston, Son & Co. Phila. 1895.

Sewage Disposal on the Farm and Protection of Drinking Water. Theobald Smith. U. S. Dept. Agr., Farmers' Bull. 43. 1896.

Water Supply (Considered Principally from a Sanitary Standpoint). W P. Mason. John Wiley & Sons. New York. 1903.

Water Analysis. J. A. Wanklyn and E. T. Chapman. Tenth Ed. Kegan Paul, Trench, Trübner & Co. London. 1896.

Examination of Water and Water Supplies. John C. Thresh. H. A. Churchill & Co. London. 1896.

Mikroskopische Wasseranalyse. Carl Mez. J. Springer. Berlin. 1898.

A Simple Method of Water Analysis. John C. Thresh. J. & A. Churchill. London. 1898.

Water Purification at Louisville, Ky. Geo. W. Fuller. D. Van Nostrand Co. New York. 1898.

Report on Water Purification at Cincinnati, O. Geo. W. Fuller. Board of Trustees, Cincinnati. 1899.

Report of Filtration Commission, Pittsburgh, Pa. 1899.

Examination of Water (Chemical and Bacteriological). William P. Mason. John Wiley & Sons. New York. 1899.

The Microscopy of Drinking Water. Geo. C. Whipple. John Wiley & Sons. New York. 1899.

Geological Survey. State of Washington. 1901.

Report of Streams Examination, Sanitary District of Chicago. 1902.

Chemical Survey of the Waters of Illinois. 1897–1902.

Water and its Purification. S. Rideal. Crosby, Lockwood & Son. London. 1902.

Report on Water Purification Investigations. New Orleans Sewerage and Water Board. 1903.

Elements of Water Bacteriology. S. C. Prescott and C.-E. A. Winslow. John Wiley & Sons. New York. 1904.

State Board of Health Reports for Massachusetts, Michigan, Illinois, Ohio. The Mass. Reports for 1872–75 and 1890–1900, especially, contain many valuable papers, the following being some of the most important of them:

Chemical Examination of Water and Interpretation of Analyses. Thomas M. Drown. Rep. Mass State Board of Health, 1892, 319.

Discussion of Special Topics Relating to the Quality of Public Water Supplies. F. P. Stearns and T. M. Drown. Rep. Mass. State Board of Health, 1890, 717.

On the Amount of Dissolved Oxygen contained in Waters of Ponds and Reservoirs at Different Depths. Thomas M. Drown. Rep. Mass. State Board of Health, 1891, 373.

On the Amount of Dissolved Oxygen contained in Waters of Ponds and Reservoirs at Different Depths in Winter under the Ice. Thomas M. Drown. Rep. Mass. State Board of Health, 1892, 333.

On the Mineral Contents of Some Natural Waters in Mass. Thomas M. Drown. Rep. Mass. State Board of Health, 1892, 345.

The Effect of the Aeration of Natural Waters. Thomas M. Drown. Rep. Mass. State Board of Health, 1891, 385.

In addition to the above the following papers contain much information of value on special topics relating to water supply and water analysis:

Chemical Examination of Drinking Water. Thomas M. Drown. Proc. Soc. Arts., M. I. T., 1887–8, 87.

The Analysis of Water—Chemical, Microscopical, and Bacteriological. Thomas M. Drown. J. N. E. Water Works Assoc., 4 (1889), 79.

On the Loss on Ignition in Water Analysis. Thomas M. Drown. Tech. Quart., 2 (1888), 132.

The Odor and Color of Surface Waters. Thomas M. Drown. Tech. Quart., 1 (1888), 250.

Reduction of Nitrates by Bacteria. Ellen H. Richards and George W. Rolfe. Tech. Quart., 9 (1896), 40.

The Purification of Water by Freezing. Thomas M. Drown. J. N. E. Water Works Assoc., 8 (1893), 46.

The Filtration of Natural Waters. Thomas M. Drown. J. of the Assoc. of Eng. Soc., 9 (1890), 356.

A Study of Self-Purification in the Sudbury River. A. G. Woodman, C.-E. A. Winslow, and P. Hansen. Tech. Quart., 15, 1902.

Normal Distribution of Chlorine in Connecticut. H. E. Smith and F. S. Hollis. Rept. Conn. State B'd Health, 1902.

Water Supplies of S. E. Alaska and the Black Hills of S. Dak. E. H. Richards. Tech. Quart., 16, 1903.

Notes on the Potable Waters of Mexico. E. H. Richards. Trans. Am. Inst. Min. Eng., 1901.

Rainfall on the Pacific Coast and the Factors of Water Supply in California. J. Assoc. Eng. Soc., 1903.

WATER.

Department of Interior. U. S. Geological Survey. Underground Water: Water Supply and Irrigation Paper. No. 160. Myron L. Fuller.

Field Assay of Water. No. 151. Marshall O. Leighton.

Value of Pure Water. George C. Whipple. Published by John Wiley & Sons. New York.

Report of the Commission on Additional Water Supply for the City of New York. Appendix VI.

Report of the Committee on Standard Methods of Water Analysis to the Laboratory Section of the American Public Health Association. (Reprinted from the Journal of Infectious Diseases, Supplement No. 1. May, 1905.)

Disposal of Dairy and Farm Sewage and Water Supply. Oscar Erf. Kansas State Agricultural College Experiment Station Bulletin.

FOOD.

The list given here is limited to books published since 1890.

Traité Général d'Analyse des Beurres. A. J. Zune. H. Lamartin. Paris. 1892.

Die Menschlichen Nahrungs- u. Genussmittel. J. König. Julius Springer. Berlin. 1893.

Foods and Dietaries. R. W. Burnet, M.D. P. Blakiston, Son & Co. Phila. 1893.

Analyse des Matières Alimentaires et Recherche de Leur Falsifications. Ch. Girard et A. Dupré. Vve. Ch. Dunod & P. Vicq. Paris. 1894.

Animal and Vegetable Oils, Fats, Butters and Waxes. C. R. Alder Wright. Griffin & Co. London. 1894.

Chemistry of Wheat, Flour, and Bread. Wm. Jago. Simpkin Marshall. London. 1895.

The Food Products of the World. Dr. Mary E. Green. The Hotel World. Chicago. 1895.

The Story of Germ Life. H. W. Conn. Appleton & Co. New York. 1897.

The Relation of Food to Health. George H. Townshend. Witt Publishing Co. St. Louis. 1897.

The Analysis of Food and Drugs. Part I: Milk and Milk Products. T. H. Pearmain and C. G. Moor. Baillière Tindall & Cox. London. 1897.

Principles and Practice of Agricultural Analysis. Harvey W. Wiley. Chem. Pub. Co. Easton, Pa. 1897.

Testing Milk and its Products. E. H. Farrington and F. W. Woll. Mendota Book Co. Madison, Wis. 1898.

Chemical Analysis of Oils, Fats, and Waxes. J. Lewkowitsch. Macmillan & Co. London. 1908.

Commercial Organic Analysis. A. H. Allen. Third Ed. Rev. by H. Leffman. Blakiston, Son & Co. Phila. 1898.

Die Untersuchung landwirtschaftlich und gewerblich wichtiger Stoffe. J. König. Paul Parey. Berlin. 1898.

Food Materials and their Adulterations. Ellen H. Richards. Home Science Pub. Co. Boston. 1908.

Plain Words about Food. The Rumford Kitchen Leaflets. Ellen H. Richards, Ed. Home Science Pub. Co. Boston. 1899.

Muscle, Brain, and Diet: A Plea for Simpler Foods. E. H. Miles. Sonnenschien. London. 1900.

A Handbook of Industrial Organic Chemistry. S. P. Sadtler. J. B. Lippincott Co. Phila. 1900.

Flesh Foods with Methods for their Chemical, Microscopical, and Bacteriological Examination. C. A. Mitchell. Griffin & Co. London. 1900.

Food and the Principles of Dietetics. R. Hutchinson. Wood. New York. 1901.
The Cost of Food: A Study in Dietaries. E. H. Richards. J. Wiley & Sons. New York. 1901.
Select Methods in Food Analysis. H. Leffman and W. Beam. P. Blakiston's Son & Co. Phila. 1905.
Suggested Standards for Food and Drugs. C. G. Moor. Baillière, Tindall & Cox. London. 1902.
Enzymes and their Applications. J. Effront. Trans. S. C. Prescott. J. Wiley & Sons. New York. 1902.
Foods: their Composition and Analysis. A. W. Blyth and M. W. Blyth. Griffin & Co. London. 1903.
Food Inspection and Analysis. Albert E. Leach. Wiley & Sons. New York. 1904.
Organic Analysis. Henry C. Sherman. Macmillan Co. New York. 1905.
Foods and their Adulteration. H. W. Wiley. P. Blackiston's Son & Co. Phila. 1907.

The following bulletins of the United States Department of Agriculture will also be found useful for study or reference on the general question of food:

Office of Experiment Stations, Bulletins.

No. 9. Fermentations of Milk. 1892.
11. Analyses of American Feeding Stuffs. 1892.
21. Chemistry and Economy of Food. 1895.
No. 25. Dairy Bacteriology. 1895.
28. (Rev. Ed.) Chemical Composition of American Food Materials. 1895.
29. Dietary Studies at the University of Tennessee. 1896.
31. " " " " " " Missouri. 1896.
32. " " " Purdue University. 1896.
34. Carbohydrates of Wheat, Maize, Flour, and Bread. 1896.
35. Food and Nutrition Investigations in New Jersey. 1896.
37. Dietary Studies at the Maine State College. 1897.
38. " " —Food of the Negro in Alabama. 1897.
40. " " in New Mexico. 1897.
43. Composition and Digestibility of Potatoes and Eggs. 1897.
44. Metabolism of Nitrogen and Carbon in the Human Organism. 1897.

45. A Digest of Metabolism Experiments. 1897.
46. Dietary Studies in New York City. 1898.
52. Nutrition Investigations in Pittsburgh, Pa. 1898.
53. " " at the University of Tennessee. 1898.
54. " " in New Mexico. 1898.
55. Dietary Studies in Chicago. 1898.
63. Experiments on the Conservation of Energy in the Human Body. 1899.
66. Creatin and Creatinin. 1899.
67. Bread and Bread Making. 1899.
69. Experiments on the Metabolism of Matter and Energy in the Human Body. 1899.
71. Dietary Studies of Negroes. 1899.
75. " " " University Boat Crews. 1900.
84. Nutrition Investigations at the California Agr. Expt. Station. 1900.
85. Investigations on the Digestibility and Nutritive Value of Bread. 1900.
89. Effect of Muscular Work on Digestion of Food and Metabolism of Nitrogen. 1901.
91. Nutrition Investigations at the University of Illinois, etc. 1901.
98. Effect of Severe and Prolonged Muscular Work on Food Consumption, Digestibility, and Metabolism. 1901.
101. Studies on Bread and Bread Making. 1901.
102. Losses in Cooking Meat. 1901.
107. Nutrition Investigations among Fruitarians and Chinese. 1901.
109. Metabolism of Matter and Energy in the Human Body. 1902.
116. Dietary Studies in New York City. 1902.
117. Effect of Muscular Work upon Digestibility of Food and Metabolism of Nitrogen. 1902.
121. Metabolism of Nitrogen, Sulphur, and Phosphorus in the Human Organism. 1902.
126. Digestibility and Nutritive Value of Bread. 1903.
129. Dietary Studies: Boston and other Places. 1903.
132. Further Investigations among Fruitarians. 1903.

Division of Chemistry, Bulletins.

No. 13. Foods and Food Adulteration—(Ten Parts). 1887–1902.
45. Analyses of Cereals. 1895.
46. Official Methods of Analysis. 1895.
50. Composition of Maize. 1898.
59. Composition of American Wines. 1900.
61. Pure Food Laws of Foreign Countries. 1901.
65. Provisional Methods for Analysis of Foods. 1902.
66. Fruits and Fruit Products. 1902.
69. Foods and Food Control. 1902.
72. American Wines at Paris Exposition of 1900. 1903.

Farmers' Bulletins.

No. 23. Foods: Nutritive Value and Cost. 1894.
29. Souring of Milk. 1895.
34. Meats: Composition and Cooking. 1896.
74. Milk as Food. 1898.
85. Fish as Food. 1898.
93. Sugar as Food. 1899.
112. Bread and the Principles of Bread Making. 1900.
121. Beans, Peas, and other Legumes as Food. 1900.
128. Eggs and their Uses as Food. 1901.
131. Household Tests for Detection of Oleomargarine and Renovated Butter. 1901.
142. The Nutritive and Economic Value of Food 1901.

Bureau of Chemistry Bulletins.

No. 77. Olive Oil and Its Substitutes.
84. Influence of Food Preservatives and Artificial Colors on Digestion and Health.
100. Some Forms of Food Adulteration and Simple Methods for their Detection.
107. Official and Provisional Methods of Analysis.
110. Chemical Analysis and Composition of American Honeys.
114. Meat Extracts and Similar Preparations.

Much valuable information will also be found in the monthly bulletins and reports of several of the State experiment stations and boards of health, notably those of Connecticut, North Dakota, Maine, Kansas, New Hampshire, Vermont, and Massachusetts.

INDEX.

PAGE

Acceptable water ... 80
Acid hydrolysis, of starch ... 211
mercuric nitrate, preparation of ... 260
, sulphanilic, reagent for nitrite test ... 257
, sulphuric, reagent for air analysis ... 255
, " , free from nitrogen ... 258
Acids, determination in wine ... 220
, volatile, in wine ... 220
Adams' method for fat determination ... 175
Adulteration, cause of ... 156
defined ... 156
, extent of ... 160
Air, amount required per capita ... 20
currents, location of ... 25
, composition of expired ... 10
, " inspired ... 10
, dust in ... 18
, effect of humidity in ... 14
essential to life ... 3
, occasional impurities in ... 16, 17
of cities ... 17
, variations in composition of ... 12
, water vapor in ... 14
Albumin, determination in milk ... 184
Albuminoid ammonia, in relation to organic nitrogen ... 108
in water, determination of ... 100
Alcohol, determination in lemon extract ... 232
, " " wine ... 217
, table for determining ... 244
-extract ratio ... 218
Alkalinity in water ... 119
Alkaline permanganate, reagent for water analysis ... 256
Aluminum hydroxide ... 259

PAGE
Alum in water, determination of 137
Alumina, milk of, reagent 259
Ammonia, standard solution, preparation of 257
, presence in water 78
, in water, determination of 100
Analyses, interpretation of 82
Aqueous vapor, tension of 236
Ash, determination in cereals 206
, in wine 218
, of milk 173

Babcock method for fat determination 176
Barium hydroxide, reagent for air analysis 255
Beer, analysis of 224
Benzoic acid, detection of 223
Bibliography 263
Biological examination of water 135
Boric acid, detection in milk 188
Breakfast foods 161
Brook water 86
Butter, analysis of 193
, complete analysis of 204
, composition of 191

Calcium chloride, standard solution of 259
Calorie, definition of 148
Cane-sugar, detection in milk 185
Caramel, detection in vanilla 230
Carbohydrates, function of 146
, separation in cereals 209
Carbon dioxide, amount expired 15
, determination of, in air 27
, "popular tests" for 40
as a disturbing factor 12
, properties of 21
table of weight of cubic centimeter of 237
in water, determination of 129
, a test of ventilation 23
Carbonaceous matter in water, determination of 112
Carbonic acid in water, determination of free 129
Carbon monoxide, detection of, in air 49
, estimation of, in air 50
, effect on blood 16
Change on ignition 117

PAGE
Chlorine in ground water 90
water, determination 113
" , source of 71
Casein, determination of 184
Citral, determination of 233
Clark's method for hardness 117
Classification of waters 83
Cocoanut oil, detection in butter 195
Cohen method for carbon dioxide 48
Collection of water samples 94
Color of water, determination of 130
standards for water 130–133
Colors, detection of 221
, " in milk 186
in food 163
Condensed milk, analysis of 189
, composition of 189
Cooking, changes caused by 148
Coumarin, determination of 227
, Leach's test for 228
Cream, determination of 171
"Crowd poison" 18–24
Crude fibre, determination of 214
Cycle of nitrogen 65

Dextrin, estimation in cereals 210
Diastase, estimation of starch by 212
Dietaries 152
Dissolved oxygen, reagents for, preparation of 260
in water, determination of 123
Distilled water 73
Dust and soot 54, 55, 56
, estimation of, in air 54

Ether, anhydrous, preparation of 261
extract of cereals 206
Extract in beer-wort, table for 249
, determination in beer 224
, " " wine 217
in wine, table of 247

Fat, determination of, in milk 175
Fats, value of 145
Fatty acids, determination of, in butter 196

PAGE
Fehling's solution, preparation of 261
Filters 87
Fitz and Wolpert 43
method for carbon dioxide 45
shaker 45–47
Fluorides, detection of 226
Food, composition of 143
, definition and uses 143
, principles 143
, materials, table of composition of 150
, predigested 162
Formaldehyde, detection in milk 187

Glass pipe 94
Glycerine, determination in wine 219
Gottlieb method for fat estimation 178
Ground water, history of 62
Gunning method for nitrogen 209

Hanus' iodine solution, preparation of 260
Hardness in water, determination of 117
, table of 242
Heat of combustion, values for 148
Humidity in air, effect of 14

Ice, rules for use of 72
Interpretation of water analysis 82
Iodine value, determination of 197
Iron in water, determination of 127
, standard solution of 259

Kjeldahl method for nitrogen 206

Lactose, estimation of 181
Lake water 84
Lead acetate, basic, preparation of 261
in water, determination of 139
, standard solution of 260
Lemon extract 231
oil, determination of 232
Lime water, reagent for air analysis 255
Loss on ignition in water, determination of 115

PAGE
Malt extract, preparation of 213
Melting point of butter 201
Meteoric water 59
Micro-organisms, estimation of in air 51
, role of, in water 65
Milk, acidity of 172
, adulterations of 184
, composition of 168
, fermentations of 169
, reaction of 172
, relation of constituents 179
, United States standard 169
sugar, estimation of 181
Mineral salts, value in food 147
substances in water 91
Misbranding, defined 157
Mountain "sickness" 13

Nutritive ratio 149
Nitrates in ground water 91
in water, determination of 110
Nitrate standard solution, preparation of 258
Nitrogen, cycle of 65
, determination of, by Kjeldahl method 106
essential to living matter 75
, total organic, determination of, in water 106
Nitrogenous substances, function of 144
Nitrites in water, determination of 108
estimation of, in air 51
Nitrite standard solution, preparation of 257
Naphthylamine acetate reagent for nitrite test 257
Nessler's reagent, preparation of 256

Odor of water, detection of 133
, analytical value of 88
Oleomargarine 192
Opacity of milk 171
Organic matter in the air 52
nitrogen in water, determination of 106
"Oxygen consumed," determination of 112
Oxygen dissolved in water, determination of 123–129
table for 242

Pentosans, determination of 213
Pettenkofer method for carbon dioxide 28

PAGE
Petterson and Palmquist apparatus 40
Phosphates in water, determination of 120
Purified *vs.* clarified water 69
"Popular tests" for carbon dioxide 70
Potassium chromate, reagent, preparation of 259
ferrocyanide 61
hydroxide 258
iodide reagent, ... 261
sulphide reagent 262
sulphocyanide reagent 259
Pressure, influence on respiratory exchange 13
Preservatives in food 163
Proteids of milk, determination of 183
, Kjeldahl method for 206

Residue on evaporation, determination of 115
Reducing sugar, determination in beer 225
Reducing sugar, Munson and Walker's table for 248
Refractive index of butter 201
Refractometer, Abbé 202
Reichert-Meissl number 194
Renovated butter 192
, detection of 200
Resins, detection in vanilla 229
Respiratory exchange 15
quotient 14
River water 85

"Safe" water 75–79
Salicylic acid, detection of 223
Salt, determination in butter 204
Samples, collection of water 96
Sanitary chemistry, scope of 1
science, importance of 2
Sediment of water, estimation of 136
"Sewer-air" 17–24
Shallow wells 90
Silver nitrate, chlorine reagent 259
Soap, standard solution of 259
Sodium carbonate, detection in milk 188
chloride, standard solution 258
Solids of milk 173
Soot, estimation of, in air 54
Specific gravity of butter 201
milk 170

PAGE
Specific gravity of milk, table for 243
wine 216
Spoon test 199
Springs 88
Starch, detection in milk 186
, determination of 211
Steam vacuum 50, 51
Storage of water 71, 87
Sugars, determination in cereals 210
Sulphites, detection of 225
Surface water 85, 89
, character of 72

Turbidity of water, estimation of 136
Turmeric, detection of 233

Vanilla extract 226
Vanillin, determination of 227
Ventilation, apparatus to illustrate 24
, natural *vs.* artificial 23
a necessity 19
, principle of 22
, requirements of 26
, to test efficiency of 24
Vital capacity 10

Walker method for carbon dioxide 34
Water, acceptable 82
Water analysis, blank form for 141
, points to determine in 80
, statement of results 140
, value of 94
Water, classification of 85
, circulation of 61
, determination in butter 204
, illustration of contamination of 62
, its relation to health 66
, legal restrictions upon use of 57
, need of 6
, passage through the ground 64
, preliminary inspection of source of 80
, presence of organisms in 66
, solvent power of 65
, storage of 71
, the ideal drinking-water 59

PAGE
Water-vapor in air 16
Water siphon 48, 49
, daily quantity needed 6
Water-pipes 94
Waters, table of average composition of 238
normal 239
, polluted, table of 240, 241
Water free from ammonia, preparation of 255
, determination in cereals 205
, " " milk 185
Well-water 90
Wine, analysis of 216
, composition of 215
Wolpert shaker 47
Wooden pipe 94

UNIV. OF ...

NOV 25 1912

SHORT-TITLE CATALOGUE

OF THE

PUBLICATIONS

OF

JOHN WILEY & SONS

NEW YORK

LONDON: CHAPMAN & HALL, LIMITED

ARRANGED UNDER SUBJECTS

Descriptive circulars sent on application. Books marked with an asterisk (*) are sold at *net* prices only. All books are bound in cloth unless otherwise stated.

AGRICULTURE—HORTICULTURE—FORESTRY.

Armsby's Principles of Animal Nutrition	8vo,	$4 00
* Bowman's Forest Physiography	8vo,	5 00
Budd and Hansen's American Horticultural Manual:		
Part I. Propagation, Culture, and Improvement	12mo,	1 50
Part II. Systematic Pomology	12mo,	1 50
Elliott's Engineering for Land Drainage	12mo,	2 00
Practical Farm Drainage. (Second Edition, Rewritten.)	12mo,	1 50
Fuller's Water Supplies for the Farm. (In Press.)		
Graves's Forest Mensuration	8vo,	4 00
* Principles of Handling Woodlands	Large 12mo,	1 50
Green's Principles of American Forestry	12mo,	1 50
Grotenfelt's Principles of Modern Dairy Practice. (Woll.)	12mo,	2 00
* Hawley and Hawes's Forestry in New England	8vo,	3 50
* Herrick's Denatured or Industrial Alcohol	8vo,	4 00
* Kemp and Waugh's Landscape Gardening. (New Edition, Rewritten.)	12mo,	1 50
* McKay and Larsen's Principles and Practice of Butter-making	8vo,	1 50
Maynard's Landscape Gardening as Applied to Home Decoration	12mo,	1 50
Record's Identification of the Economic Woods of the United States. (In Press.)		
Sanderson's Insects Injurious to Staple Crops	12mo,	1 50
* Insect Pests of Farm, Garden, and Orchard	Large 12mo,	3 00
* Schwarz's Longleaf Pine in Virgin Forest	12mo,	1 25
* Solotaroff's Field Book for Street-tree Mapping	12mo,	0 75
In lots of one dozen		8 00
* Shade Trees in Towns and Cities	8vo,	3 00
Stockbridge's Rocks and Soils	8vo,	2 50
Winton's Microscopy of Vegetable Foods	8vo,	7 50
Woll's Handbook for Farmers and Dairymen	16mo,	1 50

ARCHITECTURE.

* Atkinson's Orientation of Buildings or Planning for Sunlight	8vo,	2 00
Baldwin's Steam Heating for Buildings	12mo,	2 50
Berg's Buildings and Structures of American Railroads	4to,	5 00

Birkmire's Architectural Iron and Steel....8vo, $3 50
Compound Riveted Girders as Applied in Buildings....8vo, 2 00
Planning and Construction of High Office Buildings....8vo, 3 50
Skeleton Construction in Buildings....8vo, 3 00
Briggs's Modern American School Buildings....8vo, 4 00
Byrne's Inspection of Materials and Workmanship Employed in Construction. 16mo, 3 00
Carpenter's Heating and Ventilating of Buildings....8vo, 4 00
* Corthell's Allowable Pressure on Deep Foundations....12mo, 1 25
* Eckel's Building Stones and Clays....8vo, 3 00
Freitag's Architectural Engineering....8vo, 3 50
Fire Prevention and Fire Protection. (In Press.)
Fireproofing of Steel Buildings....8vo, 2 50
Gerhard's Guide to Sanitary Inspections. (Fourth Edition, Entirely Revised and Enlarged.)....12mo, 1 50
* Modern Baths and Bath Houses....8vo, 3 00
Sanitation of Public Buildings....12mo, 1 50
Theatre Fires and Panics....12mo, 1 50
* The Water Supply, Sewerage and Plumbing of Modern City Buildings, 8vo, 4 00
Johnson's Statics by Algebraic and Graphic Methods....8vo 2 00
Kellaway's How to Lay Out Suburban Home Grounds....8vo, 2 00
Kidder's Architects' and Builders' Pocket-book....16mo, mor., 5 00
Merrill's Stones for Building and Decoration....8vo, 5 00
Monckton's Stair-building....4to, 4 00
Patton's Practical Treatise on Foundations....8vo, 5 00
Peabody's Naval Architecture....8vc, 7 50
Rice's Concrete-block Manufacture....8vo, 2 00
Richey's Handbook for Superintendents of Construction....16mo, mor. 4 00
Building Foreman's Pocket Book and Ready Reference..16mo, mor. 5 00
* Building Mechanics' Ready Reference Series:
* Carpenters' and Woodworkers' Edition....16mo, mor. 1 50
* Cement Workers' and Plasterers' Edition....16mo, mor. 1 50
* Plumbers', Steam-Fitters', and Tinners' Edition...16mo, mor. 1 50
* Stone- and Brick-masons' Edition....16mo, mor. 1 50
Sabin's House Painting....12mo, 1 00
Siebert and Biggin's Modern Stone-cutting and Masonry....8vo, 1 50
Snow's Principal Species of Wood....8vo, 3 50
Wait's Engineering and Architectural Jurisprudence....8vo, 6 00
Sheep 6 50
Law of Contracts....8vo, 3 00
Law of Operations Preliminary to Construction in Engineering and Architecture....8vo, 5 00
Sheep, 5 50
Wilson's Air Conditioning....12mo, 1 50
Worcester and Atkinson's Small Hospitals, Establishment and Maintenance, Suggestions for Hospital Architecture, with Plans for a Small Hospital....12mo, 1 25

ARMY AND NAVY.

Bernadou's Smokeless Powder, Nitro-cellulose, and the Theory of the Cellulose Molecule....12mo, 2 50
Chase's Art of Pattern Making....12mo, 2 50
Screw Propellers and Marine Propulsion....8vo, 3 00
* Cloke's Enlisted Specialists' Examiner....8vo, 2 00
* Gunner's Examiner....8vo, 1 50
Craig's Azimuth....4to, 3 50
Crehore and Squier's Polarizing Photo-chronograph....8vo, 3 00
* Davis's Elements of Law....8vo, 2 50
* Treatise on the Military Law of United States....8vo, 7 00
* Dudley's Military Law and the Procedure of Courts-martial...Large 12mo, 2 50
Durand's Resistance and Propulsion of Ships....8vo, 5 00
* Dyer's Handbook of Light Artillery....12mo, 3 00

Eissler's Modern High Explosives.....8vo $4 00
* Fiebeger's Text-book on Field Fortification.....Large 12mo, 2 00
Hamilton and Bond's The Gunner's Catechism.....18mo, 1 00
* Hoff's Elementary Naval Tactics.....8vo, 1 50
Ingalls's Handbook of Problems in Direct Fire.....8vo, 4 00
* Interior Ballistics.....8vo, 3 00
* Lissak's Ordnance and Gunnery.....8vo, 6 00
* Ludlow's Logarithmic and Trigonometric Tables.....8vo, 1 00
* Lyons's Treatise on Electromagnetic Phenomena. Vols. I. and II..8vo,each, 6 00
* Mahan's Permanent Fortifications. (Mercur.).....8vo, half mor. 7 50
Manual for Courts-martial.....16mo, mor. 1 50
* Mercur's Attack of Fortified Places.....12mo, 2 00
* Elements of the Art of War.....8vo, 4 00
Nixon's Adjutants' Manual.....24mo, 1 00
Peabody's Naval Architecture.....8vo, 7 50
* Phelps's Practical Marine Surveying.....8vo, 2 50
Putnam's Nautical Charts.....8vo, 2 00
Rust's Ex-meridian Altitude, Azimuth and Star-Finding Tables.....8vo, 5 00
* Selkirk's Catechism of Manual of Guard Duty.....24mo, 0 50
Sharpe's Art of Subsisting Armies in War.....18mo, mor. 1 50
* Taylor's Speed and Power of Ships. 2 vols. Text 8vo, plates oblong 4to, 7 50
* Tupes and Poole's Manual of Bayonet Exercises and Musketry Pencing. 24mo, leather, 0 50
* Weaver's Military Explosives.....8vo, 3 00
* Woodhull's Military Hygiene for Officers of the Line.....Large 12mo, 1 50

ASSAYING.

Betts's Lead Refining by Electrolysis.....8vo, 4 00
*Butler's Handbook of Blowpipe Analysis.....16mo, 0 75
Fletcher's Practical Instructions in Quantitative Assaying with the Blowpipe. 16mo, mor. 1 50
Furman and Pardoe's Manual of Practical Assaying.....8vo, 3 00
Lodge's Notes on Assaying and Metallurgical Laboratory Experiments..8vo, 3 00
Low's Technical Methods of Ore Analysis.....8vo, 3 00
Miller's Cyanide Process.....12mo, 1 00
Manual of Assaying.....12mo, 1 00
Minet's Production of Aluminum and its Industrial Use. (Waldo.)...12mo, 2 50
Ricketts and Miller's Notes on Assaying.....8vc, 3 00
Robine and Lenglen's Cyanide Industry. (Le Clerc.).....8vc, 4 00
* Seamon's Manual for Assayers and Chemists.....Large 12mo, 2 50
Ulke's Modern Electrolytic Copper Refining.....8vo, 3 00
Wilson's Chlorination Process.....12mo, 1 50
Cyanide Processes.....12mo, 1 50

ASTRONOMY.

Comstock's Field Astronomy for Engineers.....8vo, 2 50
Craig's Azimuth.....4to, 3 50
Crandall's Text-book on Geodesy and Least Squares.....8vo, 3 00
Doolittle's Treatise on Practical Astronomy.....8vo, 4 00
Hayford's Text-book of Geodetic Astronomy.....8vo, 3 00
Hosmer's Azimuth.....16mo, mor. 1 00
* Text-book on Practical Astronomy.....8vo, 2 00
Merriman's Elements of Precise Surveying and Geodesy.....8vo, 2 50
* Michie and Harlow's Practical Astronomy.....8vo, 3 00
Rust's Ex-meridian Altitude, Azimuth and Star-Finding Tables.....8vo, 5 00
* White's Elements of Theoretical and Descriptive Astronomy.....12mo, 2 00

CHEMISTRY.

* Abderhalden's Physiological Chemistry in Thirty Lectures. (Hall and Defren.).....8vo, 5 00
* Abegg's Theory of Electrolytic Dissociation. (von Ende.).....12mo, 1 25
Alexeyeff's General Principles of Organic Syntheses. (Matthews.).....8vo, 3 00
Allen's Tables for Iron Analysis.....8vo, 3 00

Armsby's Principles of Animal Nutrition....8vo, $4 00
Arnold's Compendium of Chemistry. (Mandel.)....Large 12mo, 3 50
Association of State and National Food and Dairy Departments, Hartford Meeting, 1906....8vo, 3 00
Jamestown Meeting, 1907....8vo, 3 00
Austen's Notes for Chemical Students....12mo, 1 50
Bernadou's Smokeless Powder.—Nitro-cellulose, and Theory of the Cellulose Molecule....12mo, 2 50
* Biltz's Introduction to Inorganic Chemistry. (Hall and Phelan.)....12mo, 1 25
Laboratory Methods of Inorganic Chemistry. (Hall and Blanchard.) 8vo, 3 00
* Bingham and White's Laboratory Manual of Inorganic Chemistry..12mo. 1 00
* Blanchard's Synthetic Inorganic Chemistry....12mo, 1 00
* Bottler's German and American Varnish Making. (Sabin.)..Large 12mo, 3 50
Browne's Handbook of Sugar Analysis. (In Press.)
* Browning's Introduction to the Rarer Elements....8vo, 1 50
* Butler's Handbook of Blowpipe Analysis....16mo, 0 75
* Claassen's Beet-sugar Manufacture. (Hall and Rolfe.)....8vo, 3 00
Classen's Quantitative Chemical Analysis by Electrolysis. (Boltwood.)8vo, 3 00
Cohn's Indicators and Test-papers....12mo, 2 00
Tests and Reagents....8vo, 3 00
Cohnheim's Functions of Enzymes and Ferments. (In Press.)
* Danneel's Electrochemistry. (Merriam.)....12mo, 1 25
Dannerth's Methods of Textile Chemistry....12mo, 2 00
Duhem's Thermodynamics and Chemistry. (Burgess.)....8vo, 4 00
Effront's Enzymes and their Applications. (Prescott.)....8vo, 3 00
Eissler's Modern High Explosives....8vo, 4 00
* Ekeley's Laboratory Manual of Inorganic Chemistry....12mo, 1 00
* Fischer's Oedema....8vo, 2 00
* Physiology of Alimentation....Large 12mo, 2 00
Fletcher's Practical Instructions in Quantitative Assaying with the Blowpipe. 16mo, mor. 1 50
Fowler's Sewage Works Analyses....12mo, 2 00
Fresenius's Manual of Qualitative Chemical Analysis. (Wells.)....8vo, 5 00
Manual of Qualitative Chemical Analysis. Part I. Descriptive. (Wells.)8vo, 3 00
Quantitative Chemical Analysis. (Cohn.) 2 vols....8vo, 12 50
When Sold Separately, Vol. I, $6. Vol. II, $8.
Fuertes's Water and Public Health....12mo, 1 50
Furman and Pardoe's Manual of Practical Assaying....8vo, 3 00
* Getman's Exercises in Physical Chemistry....12mo, 2 00
Gill's Gas and Fuel Analysis for Engineers....12mo, 1 25
Gooch's Summary of Methods in Chemical Analysis. (In Press.)
* Gooch and Browning's Outlines of Qualitative Chemical Analysis. Large 12mo, 1 25
Grotenfelt's Principles of Modern Dairy Practice. (Woll.)....12mo, 2 00
Groth's Introduction to Chemical Crystallography (Marshall)....12mo, 1 25
* Hammarsten's Text-book of Physiological Chemistry. (Mandel.)....8vo, 4 00
Hanausek's Microscopy of Technical Products. (Winton.)....8vo, 5 00
* Haskins and Macleod's Organic Chemistry....12mo, 2 00
* Herrick's Denatured or Industrial Alcohol....8vo, 4 00
Hinds's Inorganic Chemistry....8vo, 3 00
* Laboratory Manual for Students....12mo, 1 00
* Holleman's Laboratory Manual of Organic Chemistry for Beginners. (Walker.)....12mo, 1 00
Text-book of Inorganic Chemistry. (Cooper.)....8vo, 2 50
Text-book of Organic Chemistry. (Walker and Mott.)....8vo, 2 50
* (Ekeley) Laboratory Manual to Accompany Holleman's Text-book of Inorganic Chemistry....12mo, 1 00
Holley's Analysis of Paint and Varnish Products. (In Press.)
* Lead and Zinc Pigments....Large 12mo, 3 00
Hopkins's Oil-chemists' Handbook....8vo 3 00
Jackson's Directions for Laboratory Work in Physiological Chemistry..8vo, 1 25
Johnson's Rapid Methods for the Chemical Analysis of Special Steels, Steel-making Alloys and Graphite....Large 12mo, 3 00
Landauer's Spectrum Analysis. (Tingle.)....8vo, 3 00
Lassar-Cohn's Application of Some General Reactions to Investigations in Organic Chemistry. (Tingle.)....12mo, 1 00

Leach's Inspection and Analysis of Food with Special Reference to State Control....8vo, $7 50
Löb's Electrochemistry of Organic Compounds. (Lorenz.)....8vo, 3 00
Lodge's Notes on Assaying and Metallurgical Laboratory Experiments..8vo, 3 00
Low's Technical Method of Ore Analysis....8vo, 3 00
Lowe's Paint for Steel Structures....12mo, 1 00
Lunge's Techno-chemical Analysis. (Cohn.)....12mo, 1 00
* McKay and Larsen's Principles and Practice of Butter-making....8vo. 1 50
Maire's Modern Pigments and their Vehicles....12mo, 2 00
Mandel's Handbook for Bio-chemical Laboratory....12mo, 1 50
* Martin's Laboratory Guide to Qualitative Analysis with the Blowpipe 12mo, 0 60
Mason's Examination of Water. (Chemical and Bacteriological.)....12mo, 1 25
Water-supply. (Considered Principally from a Sanitary Standpoint.) 8vo, 4 00
* Mathewson's First Principles of Chemical Theory....8vo, 1 00
Matthews's Laboratory Manual of Dyeing and Textile Chemistry....8vo, 3 50
Textile Fibres. 2d Edition, Rewritten....8vo, 4 00
* Meyer's Determination of Radicles in Carbon Compounds. (Tingle.) Third Edition....12mo, 1 25
Miller's Cyanide Process....12mo, 1 00
Manual of Assaying....12mo, 1 00
Minet's Production of Aluminum and its Industrial Use. (Waldo.)...12mo, 2 50
* Mittelstaedt's Technical Calculations for Sugar Works. (Bourbakis.) 12mo, 1 50
Mixter's Elementary Text-book of Chemistry....12mo. 1 50
Morgan's Elements of Physical Chemistry....12mo, 3 00
* Physical Chemistry for Electrical Engineers....12mo, 1 50
* Moore's Experiments in Organic Chemistry....12mo, 0 50
* Outlines of Organic Chemistry....12mo, 1 50
Morse's Calculations used in Cane-sugar Factories....16mo, mor. 1 50
* Muir's History of Chemical Theories and Laws....8vo, 4 00
Mulliken's General Method for the Identification of Pure Organic Compounds.
Vol. I. Compounds of Carbon with Hydrogen and Oxygen. Large 8vo, 5 00
Vol. II. Nitrogenous Compounds. (In Preparation.)
Vol. III. The Commercial Dyestuffs....Large 8vo, 5 00
* Nelson's Analysis of Drugs and Medicines....12mo, 5 00
Ostwald's Conversations on Chemistry. Part One. (Ramsey.)....12mo, 1 50
" " " " Part Two. (Turnbull.)....12mo, 2 00
* Introduction to Chemistry. (Hall and Williams.)....Large 12mo, 1 50
Owen and Standage's Dyeing and Cleaning of Textile Fabrics....12mo, 2 00
* Palmer's Practical Test Book of Chemistry....12mo, 1 00
* Pauli's Physical Chemistry in the Service of Medicine. (Fischer.)..12mo, 1 25
Penfield's Tables of Minerals, Including the Use of Minerals and Statistics of Domestic Production....8vo, 1 00
Pictet's Alkaloids and their Chemical Constitution. (Biddle.)....8vo, 5 00
Poole's Calorific Power of Fuels....8vo, 3 00
Prescott and Winslow's Elements of Water Bacteriology, with Special Reference to Sanitary Water Analysis....12mo, 1 50
* Reisig's Guide to Piece-Dyeing....8vo, 25 00
Richards and Woodman's Air, Water, and Food from a Sanitary Standpoint....8vo. 2 00
Ricketts and Miller's Notes on Assaying....8vo, 3 00
Rideal's Disinfection and the Preservation of Food....8vo, 4 00
Riggs's Elementary Manual for the Chemical Laboratory....8vo, 1 25
Robine and Lenglen's Cyanide Industry. (Le Clerc.)....8vo, 4 00
Ruddiman's Incompatibilities in Prescriptions....8vo, 2 00
Whys in Pharmacy....12mo, 1 00
* Ruer's Elements of Metallography. (Mathewson.)....8vo, 3 00
Sabin's Industrial and Artistic Technology of Paint and Varnish....8vo, 3 00
Salkowski's Physiological and Pathological Chemistry. (Orndorff.)....8vo, 2 50
* Schimpf's Essentials of Volumetric Analysis....Large 12mo, 1 50
Manual of Volumetric Analysis. (Fifth Edition, Rewritten)....8vo, 5 00
* Qualitative Chemical Analysis....8vo, 1 25
* Seamon's Manual for Assayers and Chemists....Large 12mo, 2 50
Smith's Lecture Notes on Chemistry for Dental Students....8vo, 2 50
Spencer's Handbook for Cane Sugar Manufacturers....16mo, mor. 3 00
Handbook for Chemists of Beet-sugar Houses....16mo, mor. 3 00

Stockbridge's Rocks and Soils.....8vo, $2 50
Stone's Practical Testing of Gas and Gas Meters.....8vo, 3 50
* Tillman's Descriptive General Chemistry.....8vo, 3 00
* Elementary Lessons in Heat.....8vo, 1 50
Treadwell's Qualitative Analysis. (Hall.).....8vo, 3 00
Quantitative Analysis. (Hall.).....8vo, 4 00
Turneaure and Russell's Public Water-supplies.....8vo, 5 00
Van Deventer's Physical Chemistry for Beginners. (Boltwood.).....12mo, 1 50
Venable's Methods and Devices for Bacterial Treatment of Sewage.....8vo, 3 00
Ward and Whipple's Freshwater Biology. (In Press.)
Ware's Beet-sugar Manufacture and Refining. Vol. I.....8vo, 4 00
" " " " " Vol. II.....8vo, 5 00
Washington's Manual of the Chemical Analysis of Rocks.....8vo, 2 00
* Weaver's Military Explosives.....8vo, 3 00
Wells's Laboratory Guide in Qualitative Chemical Analysis.....8vo, 1 50
Short Course in Inorganic Qualitative Chemical Analysis for Engineering Students.....12mo, 1 50
Text-book of Chemical Arithmetic.....12mo, 1 25
Whipple's Microscopy of Drinking-water.....8vo, 3 50
Wilson's Chlorination Process.....12mo, 1 50
Cyanide Processes.....12mo, 1 50
Winton's Microscopy of Vegetable Foods.....8vo, 7 50
Zsigmondy's Colloids and the Ultramicroscope. (Alexander.)..Large 12mo, 3 00

CIVIL ENGINEERING.

BRIDGES AND ROOFS. HYDRAULICS. MATERIALS OF ENGINEERING. RAILWAY ENGINEERING.

* American Civil Engineers' Pocket Book. (Mansfield Merriman, Editor-in-chief.).....16mo, mor. 5 00
Baker's Engineers' Surveying Instruments.....12mo, 3 00
Bixby's Graphical Computing Table.....Paper 19¼ × 24¼ inches. 0 25
Breed and Hosmer's Principles and Practice of Surveying. Vol. I. Elementary Surveying.....8vo, 3 00
Vol. II. Higher Surveying.....8vo, 2 50
* Burr's Ancient and Modern Engineering and the Isthmian Canal.....8vo, 3 50
Comstock's Field Astronomy for Engineers.....8vo, 2 50
* Corthell's Allowable Pressure on Deep Foundations.....12mo, 1 25
Crandall's Text-book on Geodesy and Least Squares.....8vo, 3 00
Davis's Elevation and Stadia Tables.....8vo, 1 00
* Eckel's Building Stones and Clays.....8vo, 3 00
Elliott's Engineering for Land Drainage.....12mo, 2 00
* Fiebeger's Treatise on Civil Engineering.....8vo, 5 00
Flemer's Phototopographic Methods and Instruments.....8vo, 5 00
Folwell's Sewerage. (Designing and Maintenance.).....8vo, 3 00
Freitag's Architectural Engineering.....8vo, 3 50
French and Ives's Stereotomy.....8vo, 2 50
* Hauch and Rice's Tables of Quantities for Preliminary Estimates...12mo, 1 25
Hayford's Text-book of Geodetic Astronomy.....8vo, 3 00
Hering's Ready Reference Tables (Conversion Factors.).....16mo, mor. 2 50
Hosmer's Azimuth.....16mo, mor. 1 00
* Text-book on Practical Astronomy.....8vo, 2 00
Howe's Retaining Walls for Earth.....12mo, 1 25
* Ives's Adjustments of the Engineer's Transit and Level.....16mo, bds. 0*25
Ives and Hilts's Problems in Surveying, Railroad Surveying and Geodesy.....16mo, mor. 1 50
* Johnson (J.B.) and Smith's Theory and Practice of Surveying.Large 12mo, 3 50
Johnson's (L. J.) Statics by Algebraic and Graphic Methods.....8vo, 2 00
* Kinnicutt, Winslow and Pratt's Sewage Disposal.....8vo, 3 00
* Mahan's Descriptive Geometry.....8vo, 1 50
Merriman's Elements of Precise Surveying and Geodesy.....8vo, 2 50
Merriman and Brooks's Handbook for Surveyors.....16mo, mor. 2 00
Nugent's Plane Surveying.....8vo, 3 50
Ogden's Sewer Construction.....8vo, 3 00
Sewer Design.....12mo, 2 00

* Ogden and Cleveland's Practical Methods of Sewage Disposal for Residences, Hotels, and Institutions.	8vo,	$1 50
Parsons's Disposal of Municipal Refuse	8vo,	2 00
Patton's Treatise on Civil Engineering	8vo, half leather,	7 50
Reed's Topographical Drawing and Sketching	4to,	5 00
Riemer's Shaft-sinking under Difficult Conditions. (Corning and Peele.)	8vo,	3 00
Siebert and Biggin's Modern Stone-cutting and Masonry	8vo,	1 50
Smith's Manual of Topographical Drawing. (McMillan.)	8vo,	2 50
Soper's Air and Ventilation of Subways	12mo,	2 50
* Tracy's Exercises in Surveying	12mo, mor.	1 00
Tracy's Plane Surveying	16mo, mor.	3 00
Venable's Garbage Crematories in America	8vo,	2 00
Methods and Devices for Bacterial Treatment of Sewage	8vo,	3 00
Wait's Engineering and Architectural Jurisprudence	8vo,	6 00
	Sheep,	6 50
Law of Contracts	8vo,	3 00
Law of Operations Preliminary to Construction in Engineering and Architecture	8vo,	5 00
	Sheep,	5 50
Warren's Stereotomy—Problems in Stone-cutting	8vo,	2 50
* Waterbury's Vest-Pocket Hand-book of Mathematics for Engineers.	2½ × 5½ inches, mor.	1 00
* Enlarged Edition. Including Tables	mor.	1 50
Webb's Problems in the Use and Adjustment of Engineering Instruments.	16mo, mor.	1 25
Wilson's Topographic, Trigonometric and Geodetic Surveying	8vo,	3 50

BRIDGES AND ROOFS.

Boller's Practical Treatise on the Construction of Iron Highway Bridges	8vo,	2 00
* Thames River Bridge	Oblong paper,	5 00
Burr and Falk's Design and Construction of Metallic Bridges	8vo,	5 00
Influence Lines for Bridge and Roof Computations	8vo,	3 00
Du Bois's Mechanics of Engineering. Vol. II	Small 4to,	10 00
Foster's Treatise on Wooden Trestle Bridges	4to,	5 00
Fowler's Ordinary Foundations	8vo,	3 50
Greene's Arches in Wood, Iron, and Stone	8vo,	2 50
Bridge Trusses	8vo,	2 50
Roof Trusses	8vo,	1 25
Grimm's Secondary Stresses in Bridge Trusses	8vo,	2 50
Heller's Stresses in Structures and the Accompanying Deformations	8vo,	3 00
Howe's Design of Simple Roof-trusses in Wood and Steel	8vo,	2 00
Symmetrical Masonry Arches	8vo,	2 50
Treatise on Arches	8vo,	4 00
* Hudson's Deflections and Statically Indeterminate Stresses	Small 4to,	3 50
* Plate Girder Design	8vo,	1 50
* Jacoby's Structural Details, or Elements of Design in Heavy Framing	8vo,	2 25
Johnson, Bryan and Turneaure's Theory and Practice in the Designing of Modern Framed Structures	Small 4to,	10 00
* Johnson, Bryan and Turneaure's Theory and Practice in the Designing of Modern Framed Structures. New Edition. Part I.	8vo,	3 00
* Part II. New Edition	8vo,	4 00
Merriman and Jacoby's Text-book on Roofs and Bridges:		
Part I. Stresses in Simple Trusses	8vo,	2 50
Part II. Graphic Statics	8vo,	2 50
Part III. Bridge Design	8vo,	2 50
Part IV. Higher Structures	8vo,	2 50
Ricker's Design and Construction of Roofs. (In Press.)		
Sondericker's Graphic Statics, with Applications to Trusses, Beams, and Arches	8vo,	2 00
Waddell's De Pontibus, Pocket-book for Bridge Engineers	16mo, mor.	2 00
* Specifications for Steel Bridges	12mo,	50

HYDRAULICS.

Barnes's Ice Formation	8vo,	3 00
Bazin's Experiments upon the Contraction of the Liquid Vein Issuing from an Orifice. (Trautwine.)	8vo,	2 00

Bovey's Treatise on Hydraulics.....8vo, $5 00
Church's Diagrams of Mean Velocity of Water in Open Channels.
Oblong 4to, paper, 1 50
Hydraulic Motors 8vo, 2 00
Mechanics of Fluids (Being Part IV of Mechanics of Engineering)..8vo, 3 00
Coffin's Graphical Solution of Hydraulic Problems.....16mo, mor. 2 50
Flather's Dynamometers, and the Measurement of Power.....12mo, 3 00
Folwell's Water-supply Engineering.....8vo, 4 00
Frizell's Water-power.....8vo, 5 00
Fuertes's Water and Public Health.....12mo, 1 50
Water-filtration Works.....12mo, 2 50
Ganguillet and Kutter's General Formula for the Uniform Flow of Water in Rivers and Other Channels. (Hering and Trautwine.).....8vo, 4 00
Hazen's Clean Water and How to Get It.....Large 12mo, 1 50
Filtration of Public Water-supplies.....8vo, 3 00
Hazelhurst's Towers and Tanks for Water-works.....8vo 2 50
Herschel's 115 Experiments on the Carrying Capacity of Large, Riveted, Metal Conduits.....8vo, 2 00
Hoyt and Grover's River Discharge.....8vo, 2 00
Hubbard and Kiersted's Water-works Management and Maintenance.
8vo, 4 00
* Lyndon's Development and Electrical Distribution of Water Power.
8vo, 3 00
Mason's Water-supply. (Considered Principally from a Sanitary Standpoint.).....8vo, 4 00
* Merriman's Treatise on Hydraulics. 9th Edition, Rewritten.....8vo, 4 00
* Molitor's Hydraulics of Rivers, Weirs and Sluices.....8vo, 2 00
* Morrison and Brodie's High Masonry Dam Design.....8vo, 1 50
* Richards's Laboratory Notes on Industrial Water Analysis.....8vo, 50
Schuyler's Reservoirs for Irrigation, Water-power, and Domestic Water-supply. Second Edition, Revised and Enlarged.....Large 8vo, 6 00
* Thomas and Watt's Improvement of Rivers.....4to, 6 00
Turneaure and Russell's Public Water-supplies.....8vo, 5 00
* Wegmann's Design and Construction of Dams. 6th Ed., enlarged....4to, 6 00
Water-Supply of the City of New York from 1658 to 1895..... 4to, 10 00
Whipple's Value of Pure Water.....Large 12mo, 1 00
Williams and Hazen's Hydraulic Tables.....8vo, 1 50
Wilson's Irrigation Engineering.....8vo, 4 00
Wood's Turbines.....8vo, 2 50

MATERIALS OF ENGINEERING.

Baker's Roads and Pavements.....8vo, 5 00
Treatise on Masonry Construction.....8vo, 5 00
Black's United States Public Works.....Oblong 4to, 5 00
* Blanchard and Drowne's Highway Engineering, as Presented at the Second International Road Congress, Brussels, 1910.....8vo, 2 00
Bleininger's Manufacture of Hydraulic Cement. (In Preparation.)
* Bottler's German and American Varnish Making. (Sabin.)..Large 12mo, 3 50
Burr's Elasticity and Resistance of the Materials of Engineering.....8vo, 7 50
Byrne's Highway Construction.....8vo, 5 00
Inspection of the Materials and Workmanship Employed in Construction.
16mo, 3 00
Church's Mechanics of Engineering.....8vo, 6 00
Mechanics of Solids (Being Parts I, II, III of Mechanics of Engineering.....8vo, 4 50
Du Bois's Mechanics of Engineering.
Vol. I. Kinematics, Statics. Kinetics.....Small 4to, 7 50
Vol. II. The Stresses in Framed Structures, Strength of Materials and Theory of Flexures.....Small 4to, 10 00
* Eckel's Building Stones and Clays.....8vo, 3 00
* Cements, Limes, and Plasters.....8vo, 6 00
Fowler's Ordinary Foundations.....8vo, 3 50
* Greene's Structural Mechanics.....8vo, 2 50
Holley's Analysis of Paint and Varnish Products. (In Press.)
* Lead and Zinc Pigments.....Large 12mo, 3 00

* Hubbard's Dust Preventives and Road Binders	8vo,	$3 00
Johnson's (C. M.) Rapid Methods for the Chemical Analysis of Special Steels, Steel-making Alloys and Graphite	Large 12mo,	3 00
Johnson's (J. B.) Materials of Construction	Large 8vo,	6 00
Keep's Cast Iron	8vo,	2 50
Lanza's Applied Mechanics	8vo,	7 50
Lowe's Paints for Steel Structures	12mo,	1 00
Maire's Modern Pigments and their Vehicles	12mo,	2 00
* Martin's Text Book on Mechanics. Vol. I. Statics	12mo,	1 25
* Vol. II. Kinematics and Kinetics	12mo,	1 50
* Vol. III. Mechanics of Materials	12mo,	1 50
Maurer's Technical Mechanics	8vo,	4 00
Merrill's Stones for Building and Decoration	8vo,	5 00
Merriman's Mechanics of Materials	8vo,	5 00
* Strength of Materials	12mo,	1 00
Metcalf's Steel. A Manual for Steel-users	12mo,	2 00
Morrison's Highway Engineering	8vo,	2 50
* Murdock's Strength of Materials	12mo,	2 00
Patton's Practical Treatise on Foundations	8vo,	5 00
Rice's Concrete Block Manufacture	8vo,	2 00
Richardson's Modern Asphalt Pavement	8vo,	3 00
Richey's Building Foreman's Pocket Book and Ready Reference	16mo, mor.	5 00
* Cement Workers' and Plasterers' Edition (Building Mechanics' Ready Reference Series)	16mo, mor.	1 50
Handbook for Superintendents of Construction	16mo, mor.	4 00
* Stone and Brick Masons' Edition (Building Mechanics' Ready Reference Series)	16mo, mor.	1 50
* Ries's Clays: Their Occurrence, Properties, and Uses	8vo,	5 00
* Ries and Leighton's History of the Clay-working Industry of the United States	8vo,	2 50
Sabin's Industrial and Artistic Technology of Paint and Varnish	8vo,	3 00
* Smith's Strength of Material	12mo,	1 25
Snow's Principal Species of Wood	8vo,	3 50
Spalding's Hydraulic Cement	12mo,	2 00
Text-book on Roads and Pavements	12mo,	2 00
* Taylor and Thompson's Concrete Costs	Small 8vo,	5 00
* Extracts on Reinforced Concrete Design	8vo,	2 00
Treatise on Concrete, Plain and Reinforced	8vo,	5 00
Thurston's Materials of Engineering. In Three Parts	8vo,	8 00
Part I. Non-metallic Materials of Engineering and Metallurgy	8vo,	2 00
Part II. Iron and Steel	8vo,	3 50
Part III. A Treatise on Brasses, Bronzes, and Other Alloys and their Constituents	8vo,	2 50
Tillson's Street Pavements and Paving Materials	8vo,	4 00
Turneaure and Maurer's Principles of Reinforced Concrete Construction. Second Edition, Revised and Enlarged	8vo,	3 50
Waterbury's Cement Laboratory Manual	12mo,	1 00
* Laboratory Manual for Testing Materials of Construction	12mo,	1 50
Wood's (De V.) Treatise on the Resistance of Materials, and an Appendix on the Preservation of Timber	8vo,	2 00
Wood's (M. P.) Rustless Coatings: Corrosion and Electrolysis of Iron and Steel	8vo,	4 00

RAILWAY ENGINEERING.

Andrews's Handbook for Street Railway Engineers	3×5 inches, mor.	1 25
Berg's Buildings and Structures of American Railroads	4to,	5 00
Brooks's Handbook of Street Railroad Location	16mo, mor.	1 50
* Burt's Railway Station Service	12mo,	2 00
Butts's Civil Engineer's Field-book	16mo, mor.	2 50
Crandall's Railway and Other Earthwork Tables	8vo,	1 50
Crandall and Barnes's Railroad Surveying	16mo, mor.	2 00
* Crockett's Methods for Earthwork Computations	8vo,	1 50
Dredge's History of the Pennsylvania Railroad. (1879)	Paper,	5 00
Fisher's Table of Cubic Yards	Cardboard,	25
* Gilbert Wightman and Saunders's Subways and Tunnels of New York	8vo,	4 00
Godwin's Railroad Engineers' Field-book and Explorers' Guide	16mo, mor.	2 50

Hudson's Tables for Calculating the Cubic Contents of Excavations and Embankments.....8vo, $1 00
Ives and Hilts's Problems in Surveying, Railroad Surveying and Geodesy.....16mo, mor. 1 50
Molitor and Beard's Manual for Resident Engineers.....16mo, 1 00
Nagle's Field Manual for Railroad Engineers.....16mo, mor. 3 00
* Orrock's Railroad Structures and Estimates.....8vo, 3 00
Philbrick's Field Manual for Engineers.....16mo, mor. 3 00
Raymond's Railroad Field Geometry.....16mo, mor. 2 00
Elements of Railroad Engineering.....8vo, 3 50
Railroad Engineer's Field Book. (In Preparation.)
Roberts' Track Formulæ and Tables.....16mo, mor. 3 00
Searles's Field Engineering.....16mo, mor. 3 00
Railroad Spiral.....16mo, mor. 1 50
Taylor's Prismoidal Formulæ and Earthwork.....8vo, 1 50
Webb's Economics of Railroad Construction.....Large 12mo, 2 50
Railroad Construction.....16mo, mor. 5 00
Wellington's Economic Theory of the Location of Railways.....Large 12mo, 5 00
Wilson's Elements of Railroad-Track and Construction.....12mo, 2 00

DRAWING.

Barr and Wood's Kinematics of Machinery.....8vo, 2 50
* Bartlett's Mechanical Drawing.....8vo, 3 00
* " " " Abridged Ed.....8vo, 1 50
* Bartlett and Johnson's Engineering Descriptive Geometry.....8vo, 1 50
Blessing and Darling's Descriptive Geometry. (In Press.)
Elements of Drawing. (In Press.)
Coolidge's Manual of Drawing.....8vo, paper, 1 00
Coolidge and Freeman's Elements of General Drafting for Mechanical Engineers.....Oblong 4to, 2 50
Durley's Kinematics of Machines.....8vo, 4 00
Emch's Introduction to Projective Geometry and its Application.....8vo, 2 50
Hill's Text-book on Shades and Shadows, and Perspective.....8vo, 2 00
Jamison's Advanced Mechanical Drawing.....8vo, 2 00
Elements of Mechanical Drawing.....8vo, 2 50
Jones's Machine Design:
Part I. Kinematics of Machinery.....8vo, 1 50
Part II. Form, Strength, and Proportions of Parts.....8vo, 3 00
* Kimball and Barr's Machine Design.....8vo, 3 00
MacCord's Elements of Descriptive Geometry.....8vo, 3 00
Kinematics; or, Practical Mechanism.....8vo, 5 00
Mechanical Drawing.....4to, 4 00
Velocity Diagrams.....8vo, 1 50
McLeod's Descriptive Geometry.....Large 12mo, 1 50
* Mahan's Descriptive Geometry and Stone-cutting.....8vo, 1 50
Industrial Drawing. (Thompson.).....8vo, 3 50
Moyer's Descriptive Geometry.....8vo, 2 00
Reed's Topographical Drawing and Sketching.....4to, 5 00
* Reid's Mechanical Drawing. (Elementary and Advanced.).....8vo, 2 00
Text-book of Mechanical Drawing and Elementary Machine Design.....8vo, 3 00
Robinson's Principles of Mechanism.....8vo, 3 00
Schwamb and Merrill's Elements of Mechanism.....8vo, 3 00
Smith (A. W.) and Marx's Machine Design.....8vo, 3 00
Smith's (R. S.) Manual of Topographical Drawing. (McMillan.).....8vo, 2 50
* Titsworth's Elements of Mechanical Drawing.....Oblong 8vo, 1 25
Tracy and North's Descriptive Geometry. (In Press.)
Warren's Elements of Descriptive Geometry, Shadows, and Perspective.....8vo, 3 50
Elements of Machine Construction and Drawing.....8vo, 7 50
Elements of Plane and Solid Free-hand Geometrical Drawing.....12mo, 1 00
General Problems of Shades and Shadows.....8vo, 3 00
Manual of Elementary Problems in the Linear Perspective of Forms and Shadow.....12mo, 1 00
Manual of Elementary Projection Drawing.....12mo, 1 50
Plane Problems in Elementary Geometry.....12mo, 1 25
Weisbach's Kinematics and Power of Transmission. (Hermann and Klein.).....8vo, 5 00
Wilson's (H. M.) Topographic Surveying.....8vo, 3 50

* Wilson's (V. T.) Descriptive Geometry.....8vo, $1 50
Free-hand Lettering.....8vo, 1 00
Free-hand Perspective.....8vo, 2 50
Woolf's Elementary Course in Descriptive Geometry.....Large 8vo, 3 00

ELECTRICITY AND PHYSICS.

* Abegg's Theory of Electrolytic Dissociation. (von Ende.).....12mo, 1 25
Andrews's Hand-book for Street Railway Engineers.....3×5 inches mor. 1 25
Anthony and Ball's Lecture-notes on the Theory of Electrical Measurements.....12mo, 1 00
Anthony and Brackett's Text-book of Physics. (Magie.)....Large 12mo, 3 00
Benjamin's History of Electricity.....8vo, 3 00
Betts's Lead Refining and Electrolysis.....8vo, 4 00
* Burgess and Le Chatelier's Measurement of High Temperatures. Third Edition.....8vo, 4 00
Classen's Quantitative Chemical Analysis by Electrolysis. (Boltwood.).8vo, 3 00
* Collins's Manual of Wireless Telegraphy and Telephony.....12mo, 1 50
Crehore and Squier's Polarizing Photo-chronograph.....8vo, 3 00
* Danneel's Electrochemistry. (Merriam.).....12mo, 1 25
Dawson's "Engineering" and Electric Traction Pocket-book....16mo, mor. 5 00
Dolezalek's Theory of the Lead Accumulator (Storage Battery). (von Ende.) 12mo, 2 50
Duhem's Thermodynamics and Chemistry. (Burgess.).....8vo, 4 00
Flather's Dynamometers, and the Measurement of Power.....12mo, 3 00
* Getman's Introduction to Physical Science.....12mo, 1 50
Gilbert's De Magnete. (Mottelay).....8vo, 2 50
* Hanchett's Alternating Currents.....12mo, 1 00
Hering's Ready Reference Tables (Conversion Factors).....16mo, mor. 2 50
* Hobart and Ellis's High-speed Dynamo Electric Machinery.....8vo, 6 00
Holman's Precision of Measurements.....8vo, 2 00
Telescope-Mirror-scale Method, Adjustments, and Tests.....Large 8vo, 0 75
* Hutchinson's High-Efficiency Electrical Illuminants and Illumination. Large 12mo, 2 50
* Jones's Electric Ignition.....8vo, 4 00
Karapetoff's Experimental Electrical Engineering:
* Vol. I.....8vo, 3 50
* Vol. II.....8vo, 2 50
Kinzbrunner's Testing of Continuous-current Machines.....8vo, 2 00
* Koch's Mathematics of Applied Electricity.....Small 8vo, 3 00
Landauer's Spectrum Analysis. (Tingle.).....8vo, 3 00
* Lauffer's Electrical Injuries.....16mo, 0 50
Löb's Electrochemistry of Organic Compounds. (Lorenz.).....8vo, 3 00
* Lyndon's Development and Electrical Distribution of Water Power..8vo, 3 00
* Lyons's Treatise on Electromagnetic Phenomena. Vols. I. and II. 8vo, each, 6 00
* Michie's Elements of Wave Motion Relating to Sound and Light.....8vo, 4 00
* Morgan's Physical Chemistry for Electrical Engineers.....12mo, 1 50
* Norris's Introduction to the Study of Electrical Engineering.....8vo, 2 50
Norris and Dennison's Course of Problems on the Electrical Characteristics of Circuits and Machines. (In Press.)
* Parshall and Hobart's Electric Machine Design.....4to. half mor, 12 50
Reagan's Locomotives: Simple, Compound, and Electric. New Edition. Large 12mo, 3 50
* Rosenberg's Electrical Engineering. (Haldane Gee—Kinzbrunner.)..8vo, 2 00
* Ryan's Design of Electrical Machinery:
* Vol. I. Direct Current Dynamos.....8vo, 1 50
Vol. II. Alternating Current Transformers.....8vo, 1 50
Vol. III. Alternators, Synchronous Motors, and Rotary Converters. (In Preparation.)
Ryan, Norris, and Hoxie's Text Book of Electrical Machinery.....8vo, 2 50
Schapper's Laboratory Guide for Students in Physical Chemistry.....12mo, 1 00
* Tillman's Elementary Lessons in Heat.....8vo, 1 50
* Timbie's Elements of Electricity.....Large 12mo, 2 00
* Answers to Problems in Elements of Electricity.....12mo, Paper 0 25
Tory and Pitcher's Manual of Laboratory Physics.....Large 12mo, 2 00
Ulke's Modern Electrolytic Copper Refining.....8vo, 3 00
* Waters's Commercial Dynamo Design.....8vo, 2 00

LAW.

* Brennan's Hand-book of Useful Legal Information for Business Men.	16mo, mor.	$5 00
* Davis's Elements of Law	8vo,	2 50
* Treatise on the Military Law of United States	8vo,	7 00
* Dudley's Military Law and the Procedure of Courts-martial	Large 12mo,	2 50
Manual for Courts-martial	16mo, mor.	1 50
Wait's Engineering and Architectural Jurisprudence	8vo,	6 00
	Sheep,	6 50
Law of Contracts	8vo,	3 00
Law of Operations Preliminary to Construction in Engineering and Architecture	8vo,	5 00
	Sheep,	5 50

MATHEMATICS.

Baker's Elliptic Functions	8vo,	1 50
Briggs's Elements of Plane Analytic Geometry. (Bôcher.)	12mo,	1 00
* Buchanan's Plane and Spherical Trigonometry	8vo,	1 00
Byerly's Harmonic Functions	8vo,	1 00
Chandler's Elements of the Infinitesimal Calculus	12mo,	2 00
* Coffin's Vector Analysis	12mo,	2 50
Compton's Manual of Logarithmic Computations	12mo,	1 50
* Dickson's College Algebra	Large 12mo,	1 50
* Introduction to the Theory of Algebraic Equations	Large 12mo,	1 25
Emch's Introduction to Projective Geometry and its Application	8vo,	2 50
Fiske's Functions of a Complex Variable	8vo,	1 00
Halsted's Elementary Synthetic Geometry	8vo,	1 50
Elements of Geometry	8vo,	1 75
* Rational Geometry	12mo,	1 50
Synthetic Projective Geometry	8vo,	1 00
* Hancock's Lectures on the Theory of Elliptic Functions	8vo,	5 00
Hyde's Grassmann's Space Analysis	8vo,	1 00
* Johnson's (J. B.) Three-place Logarithmic Tables: Vest-pocket size, paper,		0 15
* 100 copies,		5 00
* Mounted on heavy cardboard, 8 × 10 inches,		0 25
* 10 copies,		2 00
Johnson's (W. W.) Abridged Editions of Differential and Integral Calculus.	Large 12mo, 1 vol.	2 50
Curve Tracing in Cartesian Co-ordinates	12mo,	1 00
Differential Equations	8vo,	1 00
Elementary Treatise on Differential Calculus	Large 12mo,	1 50
Elementary Treatise on the Integral Calculus	Large 12mo,	1 50
* Theoretical Mechanics	12mo,	3 00
Theory of Errors and the Method of Least Squares	12mo,	1 50
Treatise on Differential Calculus	Large 12mo,	3 00
Treatise on the Integral Calculus	Large 12mo,	3 00
Treatise on Ordinary and Partial Differential Equations	Large 12mo,	3 50
Karapetoff's Engineering Applications of Higher Mathematics:		
* Part I. Problems on Machine Design	Large 12mo,	0 75
* Koch's Mathematics of Applied Electricity	8vo,	3 00
Laplace's Philosophical Essay on Probabilities. (Truscott and Emory.)	12mo,	2 00
* Le Messurier's Key to Professor W. W. Johnson's Differential Equations.	Small 8vo,	1 75
* Ludlow's Logarithmic and Trigonometric Tables	8vo,	1 00
* Ludlow and Bass's Elements of Trigonometry and Logarithmic and Other Tables	8vo,	3 00
* Trigonometry and Tables published separately	Each,	2 00
Macfarlane's Vector Analysis and Quaternions	8vo,	1 00
McMahon's Hyperbolic Functions	8vo,	1 00
Manning's Irrational Numbers and their Representation by Sequences and Series	12mo,	1 25
* Martin's Text Book on Mechanics. Vol. I. Statics	12mo,	1 25
* Vol. II. Kinematics and Kinetics	12mo,	1 50
* Vol. III. Mechanics of Materials	12mo,	1 50

Mathematical Monographs. Edited by Mansfield Merriman and Robert S. Woodward.....Octavo, each $1 00
No. 1. History of Modern Mathematics, by David Eugene Smith. No. 2. Synthetic Projective Geometry, by George Bruce Halsted. No. 3. Determinants, by Laenas Gifford Weld. No. 4. Hyperbolic Functions, by James McMahon. No. 5. Harmonic Functions, by William E. Byerly. No. 6. Grassmann's Space Analysis, by Edward W. Hyde. No. 7. Probability and Theory of Errors, by Robert S. Woodward. No. 8. Vector Analysis and Quaternions, by Alexander Macfarlane. No. 9. Differential Equations, by William Woolsey Johnson. No. 10. The Solution of Equations, by Mansfield Merriman. No. 11. Functions of a Complex Variable, by Thomas S. Fiske.

Maurer's Technical Mechanics.....8vo, 4 00
Merriman's Method of Least Squares.....8vo, 2 00
Solution of Equations.....8vo, 1 00
* Moritz's Elements of Plane Trigonometry.....8vo, 2 00
Rice and Johnson's Differential and Integral Calculus. 2 vols. in one. Large 12mo, 1 50
Elementary Treatise on the Differential Calculus.....Large 12mo, 3 00
Smith's History of Modern Mathematics.....8vo, 1 00
* Veblen and Lennes's Introduction to the Real Infinitesimal Analysis of One Variable.....8vo, 2 00
* Waterbury's Vest Pocket Hand-book of Mathematics for Engineers. 2½ × 5½ inches, mor. 1 00
* Enlarged Edition, Including Tables.....mor. 1 50
Weld's Determinants.....8vo, 1 00
Wood's Elements of Co-ordinate Geometry.....8vo, 2 00
Woodward's Probability and Theory of Errors.....8vo, 1 00

MECHANICAL ENGINEERING.

MATERIALS OF ENGINEERING, STEAM-ENGINES AND BOILERS.

Bacon's Forge Practice.....12mo, 1 50
Baldwin's Steam Heating for Buildings.....12mo, 2 50
Barr and Wood's Kinematics of Machinery.....8vo, 2 50
* Bartlett's Mechanical Drawing.....8vo, 3 00
* " " " Abridged Ed.....8vo, 1 50
* Bartlett and Johnson's Engineering Descriptive Geometry.....8vo, 1 50
* Burr's Ancient and Modern Engineering and the Isthmian Canal.....8vo, 3 50
Carpenter's Heating and Ventilating Buildings.....8vo, 4 00
* Carpenter and Diederichs's Experimental Engineering.....8vo, 6 00
* Clerk's The Gas, Petrol and Oil Engine.....8vo, 4 00
Compton's First Lessons in Metal Working.....12mo, 1 50
Compton and De Groodt's Speed Lathe.....12mo, 1 50
Coolidge's Manual of Drawing.....8vo, paper, 1 00
Coolidge and Freeman's Elements of General Drafting for Mechanical Engineers.....Oblong 4to, 2 50
Cromwell's Treatise on Belts and Pulleys.....12mo, 1 50
Treatise on Toothed Gearing.....12mo, 1 50
Dingey's Machinery Pattern Making.....12mo, 2 00
Durley's Kinematics of Machines.....8vo, 4 00
Flanders's Gear-cutting Machinery.....Large 12mo, 3 00
Flather's Dynamometers and the Measurement of Power.....12mo, 3 00
Rope Driving.....12mo, 2 00
Gill's Gas and Fuel Analysis for Engineers.....12mo, 1 25
Goss's Locomotive Sparks.....8vo, 2 00
* Greene's Pumping Machinery.....8vo, 4 00
Hering's Ready Reference Tables (Conversion Factors).....16mo, mor. 2 50
* Hobart and Ellis's High Speed Dynamo Electric Machinery.....8vo, 6 00
Hutton's Gas Engine.....8vo, 5 00
Jamison's Advanced Mechanical Drawing.....8vo, 2 00
Elements of Mechanical Drawing.....8vo, 2 50
Jones's Gas Engine.....8vo, 4 00
Machine Design:
Part I. Kinematics of Machinery.....8vo, 1 50
Part II. Form, Strength, and Proportions of Parts.....8vo, 3 00

* Kaup's Machine Shop Practice	Large 12mo	$1 25
* Kent's Mechanical Engineer's Pocket-Book	16mo, mor.	5 00
Kerr's Power and Power Transmission	8vo,	2 00
* Kimball and Barr's Machine Design	8vo,	3 00
* King's Elements of the Mechanics of Materials and of Power of Transmission	8vo,	2 50
* Lanza's Dynamics of Machinery	8vo,	2 50
Leonard's Machine Shop Tools and Methods	8vo,	4 00
* Levin's Gas Engine	8vo,	4 00
* Lorenz's Modern Refrigerating Machinery. (Pope, Haven, and Dean)	8vo,	4 00
MacCord's Kinematics; or, Practical Mechanism	8vo,	5 00
Mechanical Drawing	4to,	4 00
Velocity Diagrams	8vo,	1 50
MacFarland's Standard Reduction Factors for Gases	8vo,	1 50
Mahan's Industrial Drawing. (Thompson.)	8vo.	3 50
Mehrtens's Gas Engine Theory and Design	Large 12mo,	2 50
Miller, Berry, and Riley's Problems in Thermodynamics and Heat Engineering	8vo, paper,	0 75
Oberg's Handbook of Small Tools	Large 12mo,	2 50
* Parshall and Hobart's Electric Machine Design. Small 4to, half leather,		12 50
* Peele's Compressed Air Plant. Second Edition, Revised and Enlarged	8vo,	3 50
* Perkins's Introduction to General Thermodynamics	12mo.	1 50
Poole's Calorific Power of Fuels	8vo,	3 00
* Porter's Engineering Reminiscences, 1855 to 1882	8vo,	3 00
Randall's Treatise on Heat. (In Press.)		
* Reid's Mechanical Drawing. (Elementary and Advanced.)	8vo,	2 00
Text-book of Mechanical Drawing and Elementary Machine Design	8vo,	3 00
Richards's Compressed Air	12mo,	1 50
Robinson's Principles of Mechanism	8vo,	3 00
Schwamb and Merrill's Elements of Mechanism	8vo,	3 00
Smith (A. W.) and Marx's Machine Design	8vo,	3 00
Smith's (O.) Press-working of Metals	8vo,	3 00
Sorel's Carbureting and Combustion in Alcohol Engines. (Woodward and Preston.)	Large 12mo,	3 00
Stone's Practical Testing of Gas and Gas Meters	8vo,	3 50
Thurston's Animal as a Machine and Prime Motor, and the Laws of Energetics	12mo,	1 00
Treatise on Friction and Lost Work in Machinery and Mill Work	8vo,	3 00
* Tillson's Complete Automobile Instructor	16mo,	1 50
* Titsworth's Elements of Mechanical Drawing	Oblong 8vo,	1 25
Warren's Elements of Machine Construction and Drawing	8vo,	7 50
* Waterbury's Vest Pocket Hand-book of Mathematics for Engineers.	$2\frac{1}{2} \times 5\frac{1}{2}$ inches, mor.	1 00
* Enlarged Edition, Including Tables	mor.	1 50
Weisbach's Kinematics and the Power of Transmission. (Herrmann—Klein.)	8vo,	5 00
Machinery of Transmission and Governors. (Hermann—Klein.)	8vo,	5 00
Wood's Turbines	8vo,	2 50

MATERIALS OF ENGINEERING.

Burr's Elasticity and Resistance of the Materials of Engineering	8vo,	7 50
Church's Mechanics of Engineering	8vo,	6 00
Mechanics of Solids (Being Parts I, II, III of Mechanics of Engineering)	8vo,	4 50
* Greene's Structural Mechanics	8vo,	2 50
Holley's Analysis of Paint and Varnish Products. (In Press.)		
* Lead and Zinc Pigments	Large 12mo,	3 00
Johnson's (C. M.) Rapid Methods for the Chemical Analysis of Special Steels, Steel-Making Alloys and Graphite	Large 12mo,	3 00
Johnson's (J. B.) Materials of Construction	8vo,	6 00
Keep's Cast Iron	8vo,	2 50
* King's Elements of the Mechanics of Materials and of Power of Transmission	8vo,	2 50
Lanza's Applied Mechanics	8vo,	7 50
Lowe's Paints for Steel Structures	12mo,	1 00
Maire's Modern Pigments and their Vehicles	12mo,	2 00

Maurer's Technical Mechanics.....8vo, $4 00
Merriman's Mechanics of Materials.....8vo, 5 00
* Strength of Materials.....12mo, 1 00
Metcalf's Steel. A Manual for Steel-users.....12mo, 2 00
* Murdock's Strength of Materials.....12mo, 2 00
Sabin's Industrial and Artistic Technology of Paint and Varnish.....8vo, 3 00
Smith's (A. W.) Materials of Machines.....12mo, 1 00
* Smith's (H. E.) Strength of Material.....12mo, 1 25
Thurston's Materials of Engineering.....3 vols., 8vo, 8 00
Part I. Non-metallic Materials of Engineering.....8vo, 2 00
Part II. Iron and Steel.....8vo, 3 50
Part III. A Treatise on Brasses, Bronzes, and Other Alloys and their Constituents.....8vo, 2 50
* Waterbury's Laboratory Manual for Testing Materials of Construction. 12mo, 1 50
Wood's (De V.) Elements of Analytical Mechanics.....8vo, 3 00
Treatise on the Resistance of Materials and an Appendix on the Preservation of Timber.....8vo, 2 00
Wood's (M. P.) Rustless Coatings: Corrosion and Electrolysis of Iron and Steel.....8vo, 4 00

STEAM-ENGINES AND BOILERS.

Berry's Temperature-entropy Diagram. Third Edition Revised and Enlarged.....12mo, 2 50
Carnot's Reflections on the Motive Power of Heat. (Thurston.).....12mo, 1 50
Chase's Art of Pattern Making.....12mo, 2 50
Creighton's Steam-engine and other Heat Motors.....8vo, 5 00
Dawson's "Engineering" and Electric Traction Pocket-book.....16mo, mor. 5 00
* Gebhardt's Steam Power Plant Engineering.....8vo, 6 00
Goss's Locomotive Performance.....8vo, 5 00
Hemenway's Indicator Practice and Steam-engine Economy.....12mo, 2 00
Hirshfeld and Barnard's Heat Power Engineering. (In Press.)
Hutton's Heat and Heat-engines.....8vo, 5 00
Mechanical Engineering of Power Plants.....8vo, 5 00
Kent's Steam Boiler Economy.....8vo, 4 00
Kneass's Practice and Theory of the Injector.....8vo, 1 50
MacCord's Slide-valves.....8vo, 2 00
Meyer's Modern Locomotive Construction.....4to. 10 00
Miller, Berry, and Riley's Problems in Thermodynamics.....8vo, paper, 0 75
Moyer's Steam Turbine.....8vo, 4 00
Peabody's Manual of the Steam-engine Indicator.....12mo, 1 50
Tables of the Properties of Steam and Other Vapors and Temperature-Entropy Table.....8vo, 1 00
Thermodynamics of the Steam-engine and Other Heat-engines.....8vo, 5 00
* Thermodynamics of the Steam Turbine.....8vo, 3 00
Valve-gears for Steam-engines.....8vo, 2 50
Peabody and Miller's Steam-boilers.....8vo, 4 00
* Perkins's Introduction to General Thermodynamics.....12mo, 1 50
Pupin's Thermodynamics of Reversible Cycles in Gases and Saturated Vapors. (Osterberg.).....12mo, 1 25
Reagan's Locomotives: Simple, Compound, and Electric. New Edition. Large 12mo, 3 50
Sinclair's Locomotive Engine Running and Management.....12mo, 2 00
Smart's Handbook of Engineering Laboratory Practice.....12mo, 2 50
Snow's Steam-boiler Practice.....8vo, 3 00
Spangler's Notes on Thermodynamics.....12mo, 1 00
Valve-gears.....8vo, 2 50
Spangler, Greene, and Marshall's Elements of Steam-engineering.....8vo, 3 00
Thomas's Steam-turbines.....8vo, 4 00
Thurston's Handbook of Engine and Boiler Trials, and the Use of the Indicator and the Prony Brake.....8vo, 5 00
Manual of Steam-boilers, their Designs, Construction, and Operation 8vo, 5 00
Manual of the Steam-engine.....2 vols., 8vo, 10 00
Part I. History, Structure, and Theory.....8vo, 6 00
Part II. Design, Construction, and Operation.....8vo, 6 00

Wehrenfennig's Analysis and Softening of Boiler Feed-water. (Patterson) 8vo, $4 00
Weisbach's Heat, Steam, and Steam-engines. (Du Bois.) 8vo, 5 00
Whitham's Steam-engine Design 8vo, 5 00
Wood's Thermodynamics, Heat Motors, and Refrigerating Machines 8vo, 4 00

MECHANICS PURE AND APPLIED.

Church's Mechanics of Engineering 8vo, 6 00
Mechanics of Fluids (Being Part IV of Mechanics of Engineering) 8vo, 3 00
* Mechanics of Internal Work 8vo, 1 50
Mechanics of Solids (Being Parts I, II, III of Mechanics of Engineering) 8vo, 4 50
Notes and Examples in Mechanics 8vo, 2 00
Dana's Text-book of Elementary Mechanics for Colleges and Schools 12mo, 1 50
Du Bois's Elementary Principles of Mechanics:
Vol. I. Kinematics 8vo, 3 50
Vol. II. Statics 8vo, 4 00
Mechanics of Engineering. Vol. I Small 4to, 7 50
Vol. II Small 4to, 10 00
* Greene's Structural Mechanics 8vo, 2 50
* Hartmann's Elementary Mechanics for Engineering Students 12mo, 1 25
James's Kinematics of a Point and the Rational Mechanics of a Particle. Large 12mo, 2 00
* Johnson's (W. W.) Theoretical Mechanics 12mo, 3 00
* King's Elements of the Mechanics of Materials and of Power of Transmission 8vo, 2 50
Lanza's Applied Mechanics 8vo, 7 50
* Martin's Text Book on Mechanics, Vol. I, Statics 12mo, 1 25
* Vol. II. Kinematics and Kinetics 12mo, 1 50
* Vol. III. Mechanics of Materials 12mo, 1 50
Maurer's Technical Mechanics 8vo, 4 00
* Merriman's Elements of Mechanics 12mo, 1 00
Mechanics of Materials 8vo, 5 00
* Michie's Elements of Analytical Mechanics 8vo, 4 00
Robinson's Principles of Mechanism 8vo, 3 00
Sanborn's Mechanics Problems Large 12mo, 1 50
Schwamb and Merrill's Elements of Mechanism 8vo, 3 00
Wood's Elements of Analytical Mechanics 8vo, 3 00
Principles of Elementary Mechanics 12mo, 1 25

MEDICAL.

* Abderhalden's Physiological Chemistry in Thirty Lectures. (Hall and Defren.) 8vo, 5 00
von Behring's Suppression of Tuberculosis. (Bolduan.) 12mo, 1 00
* Bolduan's Immune Sera 12mo, 1 50
Bordet's Studies in Immunity. (Gay.) 8vo, 6 00
* Chapin's The Sources and Modes of Infection Large 12mo, 3 00
Davenport's Statistical Methods with Special Reference to Biological Variations 16mo, mor. 1 50
Ehrlich's Collected Studies on Immunity. (Bolduan.) 8vo 6 00
* Fischer's Nephritis Large 12mo, 2 50
* Oedema 8vo, 2 00
* Physiology of Alimentation Large 12mo, 2 00
* de Fursac's Manual of Psychiatry. (Rosanoff and Collins.) Large 12mo, 2 50
* Hammarsten's Text-book on Physiological Chemistry. (Mandel.) 8vo, 4 00
Jackson's Directions for Laboratory Work in Physiological Chemistry 8vo, 1 25
Lassar-Cohn's Praxis of Urinary Analysis. (Lorenz.) 12mo, 1 00
* Lauffer's Electrical Injuries 16mo, 0 50
Mandel's Hand-book for the Bio-Chemical Laboratory 12mo, 1 50
* Nelson's Analysis of Drugs and Medicines 12mo, 3 00
* Pauli's Physical Chemistry in the Service of Medicine. (Fischer.) 12mo, 1 25
* Pozzi-Escot's Toxins and Venoms and their Antibodies. (Cohn.) 12mo, 1 00
Rostoski's Serum Diagnosis. (Bolduan.) 12mo, 1 00
Ruddiman's Incompatibilities in Prescriptions 8vo, 2 00
Whys in Pharmacy 12mo, 1 00
Salkowski's Physiological and Pathological Chemistry. (Orndorff.) 8vo, 2 50

* Satterlee's Outlines of Human Embryology....12mo, $1 25
Smith's Lecture Notes on Chemistry for Dental Students....8vo, 2 50
* Whipple's Tyhpoid Fever....Large 12mo, 3 00
* Woodhull's Military Hygiene for Officers of the Line....Large 12mo, 1 50
* Personal Hygiene....12mo, 1 00
Worcester and Atkinson's Small Hospitals Establishment and Maintenance, and Suggestions for Hospital Architecture, with Plans for a Small Hospital....12mo, 1 25

METALLURGY.

Betts's Lead Refining by Electrolysis....8vo, 4 00
Bolland's Encyclopedia of Founding and Dictionary of Foundry Terms used in the Practice of Moulding....12mo, 3 00
Iron Founder....12mo, 2 50
" " Supplement....12mo, 2 50
* Borchers's Metallurgy. (Hall and Hayward.)....8vo, 3 00
* Burgess and Le Chatelier's Measurement of High Temperatures. Third Edition....8vo, 4 00
Douglas's Untechnical Addresses on Technical Subjects....12mo, 1 00
Goesel's Minerals and Metals: A Reference Book....16mo, mor. 3 00
* Iles's Lead-smelting....12mo, 2 50
Johnson's Rapid Methods for the Chemical Analysis of Special Steels, Steel-making Alloys and Graphite....Large 12mo, 3 00
Keep's Cast Iron....8vo, 2 50
Metcalf's Steel. A Manual for Steel-users....12mo, 2 00
Minet's Production of Aluminum and its Industrial Use. (Waldo.)..12mo, 2 50
* Palmer's Foundry Practice....Large 12mo, 2 00
* Price and Meade's Technical Analysis of Brass....12mo, 2 00
* Ruer's Elements of Metallography. (Mathewson.)....8vo, 3 00
Smith's Materials of Machines....12mo, 1 00
Tate and Stone's Foundry Practice....12mo, 2 00
Thurston's Materials of Engineering. In Three Parts....8vo, 8 00
Part I. Non-metallic Materials of Engineering, see Civil Engineering, page 9.
Part II. Iron and Steel....8vo, 3 50
Part III. A Treatise on Brasses, Bronzes, and Other Alloys and their Constituents....8vo, 2 50
Ulke's Modern Electrolytic Copper Refining....8vo, 3 00
West's American Foundry Practice....12mo, 2 50
Moulders' Text Book....12mo. 2 50

MINERALOGY.

* Browning's Introduction to the Rarer Elements....8vo, 1 50
Brush's Manual of Determinative Mineralogy. (Penfield.)....8vo, 4 00
Butler's Pocket Hand-book of Minerals....16mo, mor. 3 00
Chester's Catalogue of Minerals....8vo, paper, 1 00
Cloth, 1 25
* Crane's Gold and Silver....8vo, 5 00
Dana's First Appendix to Dana's New "System of Mineralogy"..Large 8vo, 1 00
Dana's Second Appendix to Dana's New "System of Mineralogy."
Large 8vo, 1 50
Manual of Mineralogy and Petrography....12mo, 2 00
Minerals and How to Study Them....12mo, 1 50
System of Mineralogy....Large 8vo, half leather, 12 50
Text-book of Mineralogy....8vo, 4 00
Douglas's Untechnical Addresses on Technical Subjects....12mo, 1 00
Eakle's Mineral Tables....8vo, 1 25
* Eckel's Building Stones and Clays....8vo, 3 00
Goesel's Minerals and Metals: A Reference Book....16mo, mor. 3 00
* Groth's The Optical Properties of Crystals. (Jackson.)....8vo, 3 50
Groth's Introduction to Chemical Crystallography (Marshall)....12mo, 1 25
* Hayes's Handbook for Field Geologists....16mo, mor. 1 50
Iddings's Igneous Rocks....8vo, 5 00
Rock Minerals....8vo, 5 00

Johannsen's Determination of Rock-forming Minerals in Thin Sections. 8vo, With Thumb Index $5 00
* Martin's Laboratory Guide to Qualitative Analysis with the Blow-pipe. 12mo, 0 60
Merrill's Non-metallic Minerals: Their Occurrence and Uses. 8vo, 4 00
Stones for Building and Decoration. 8vo, 5 00
* Penfield's Notes on Determinative Mineralogy and Record of Miners' Tests. 8vo, paper, 0 50
Tables of Minerals, Including the Use of Minerals and Statistics of Domestic Production. 8vo, 1 00
* Pirsson's Rocks and Rock Minerals. 12mo, 2 50
* Richards's Synopsis of Mineral Characters. 12mo, mor. 1 25
* Ries's Clays: Their Occurrence, Properties and Uses. 8vo, 5 00
* Ries and Leighton's History of the Clay-working Industry of the United States. 8vo, 2 50
* Rowe's Practical Mineralogy Simplified. 12mo, 1 25
* Tillman's Text-book of Important Minerals and Rocks. 8vo, 2 00
Washington's Manual of the Chemical Analysis of Rocks. 8vo, 2 00

MINING.

* Beard's Mine Gases and Explosions. Large 12mo, 3 00
* Crane's Gold and Silver. 8vo, 5 00
* Index of Mining Engineering Literature. 8vo, 4 00
* 8vo, mor. 5 00
* Ore Mining Methods. 8vo, 3 00
* Dana and Saunders's Rock Drilling. 8vo, 4 00
Douglas's Untechnical Addresses on Technical Subjects. 12mo, 1 00
Eissler's Modern High Explosives. 8vo, 4 00
* Gilbert Wightman and Saunders's Subways and Tunnels of New York. 8vo, 4 00
Goesel's Minerals and Metals: A Reference Book. 16mo, mor. 3 00
Ihlseng's Manual of Mining. 8vo, 5 00
* Iles's Lead Smelting. 12mo, 2 50
* Peele's Compressed Air Plant. 8vo, 3 50
Riemer's Shaft Sinking Under Difficult Conditions. (Corning and Peele.) 8vo, 3 00
* Weaver's Military Explosives. 8vo, 3 00
Wilson's Hydraulic and Placer Mining. 2d edition, rewritten. 12mo, 2 50
Treatise on Practical and Theoretical Mine Ventilation. 12mo, 1 25

SANITARY SCIENCE.

Association of State and National Food and Dairy Departments, Hartford Meeting, 1906. 8vo, 3 00
Jamestown Meeting, 1907. 8vo, 3 00
* Bashore's Outlines of Practical Sanitation. 12mo, 1 25
Sanitation of a Country House. 12mo, 1 00
Sanitation of Recreation Camps and Parks. 12mo, 1 00
* Chapin's The Sources and Modes of Infection. Large 12mo, 3 00
Folwell's Sewerage. (Designing, Construction, and Maintenance.) 8vo, 3 00
Water-supply Engineering. 8vo, 4 00
Fowler's Sewage Works Analyses. 12mo, 2 00
Fuertes's Water-filtration Works. 12mo, 2 50
Water and Public Health. 12mo, 1 50
Gerhard's Guide to Sanitary Inspections. 12mo, 1 50
* Modern Baths and Bath Houses. 8vo, 3 00
Sanitation of Public Buildings. 12mo, 1 50
* The Water Supply, Sewerage, and Plumbing of Modern City Buildings. 8vo, 4 00
Hazen's Clean Water and How to Get It. Large 12mo, 1 50
Filtration of Public Water-supplies. 8vo, 3 00
* Kinnicutt, Winslow and Pratt's Sewage Disposal. 8vo, 3 00
Leach's Inspection and Analysis of Food with Special Reference to State Control. 8vo, 7 50
Mason's Examination of Water. (Chemical and Bacteriological) 12mo, 1 25
Water-supply. (Considered principally from a Sanitary Standpoint). 8vo, 4 00
* Mast's Light and the Behavior of Organisms. Large 12mo, 2 50